STANDARD DRAWINGS CONTENTS INDEX

CITY OF PARRAMATTA

STANDARD	DRAWING DESCRIPTION	PAGE NO.
DS1	KERBS AND LAYBACKS	2
DS2	ROOFWATER OUTLET	3
DS3	FOOTPATH	4
DS3A	FOOTPATH ARTICULATE JOINT DETAIL AT TREES	5
DS3B	ASBESTOS AFFECTED FOOTPATH SITES CONCRETE	6
DS3C	ASBESTOS AFFECTED FOOTPATH SITES ASPHALT	7
DS3D	ASBESTOS AFFECTED FOOTPATH SITES CONCRETE AND ASPHALT AT EXISTING TREE LOCATIONS	8
DS4	KERB RAMP	9
DS5	DISH DRAIN CROSSING DETAIL	10
DS6	TYPICAL CYCLEWAY / SHARED PATHWAY (CONTINUOUS AND ALTERNATE POURS)	11
DS7	PASSENGER CAR CLEARANCE PROFILE	12
DS8	VEHICULAR CROSSING	13
DS9	HEAVY DUTY VEHICULAR CROSSING	14
DS10	VEHICULAR CROSSING PROFILES	15
DS11	SIGN POST SUPPORT (IN TURFED FOOTPATH AREA)	16
DS11A	SIGN POST SUPPORT (CBD IN PAVERS)	17
DS11B	SIGN POST SUPPORT (IN CONCRETE FOOTPATH AREA)	18
DS11C	SIGN POST SUPPORT (IN GRANITE PORPHYRY SETTS)	19
DS12	CORNER ROUNDING AT PROPERTY BOUNDARY	20
DS13A	PEDESTRIAN REFUGE ISLAND DETAIL (KEY IN)	21
DS13B	PEDESTRIAN REFUGE ISLAND DETAIL (TIE IN)	22
DS13C	PEDESTRIAN REFUGE ISLAND DETAIL WITH PORPHYRY SETTS (KEY IN)	23
DS14	LANDSCAPED BARRIER KERB ISLAND	24
DS15	LANDSCAPED MOUNTABLE KERB ISLAND	25
DS16	ENTRY THRESHOLD TREATMENT	26
DS17 SHT1	ROUNDABOUT CENTRE ISLAND AND ANNULUS DETAIL SHEET 1 OF 4	27
DS17 SHT2	ROUNDABOUT SPLITTER ISLAND DETAIL (BARRIER KERB) SHEET 2 OF 4	28
DS17 SHT3	ROUNDABOUT SPLITTER ISLAND DETAIL (BARRIER KERB WITH NO PEDESTRIAN GAP) SHEET 3 OF 4	29
DS17 SHT4	ROUNDABOUT SETOUT & LEVEL CONTROLS FOR VARYING PAVEMENT LEVELS	30
DS17A SHT1	ROUNDABOUT CENTRE ISLAND AND ANNULUS DETAIL WITH PORPHYRY SETTS SHEET 1 OF 3	31
DS17A SHT2	ROUNDABOUT SPLITTER ISLAND DETAIL (BARIER KERB) WITH PROPHYRY SETTS SHEET 2 OF 3	32
DS17A SHT3	ROUNDABOUT SPLITTER ISLAND DETAIL (BARIER KERB WITH NO PEDESTRIAN GAP) WITH PROPHYRY SETTS SHEET 3 OF 3	33
DS18	DOWNSTREAM PROTECTION WORK DETAILS	34
DS19	STEP IRONS	35
DS20	TYPICAL CROSS SECTION LANEWAYS	36
DS21	KERB INLET PIT (ON GRADE)	37
DS22	REAR ACCESS PIT	38
DS23	INLET PIT WITH RAISED GRATE	39
DS24 SHT1	GRATED SAG PIT USING PRECAST LINTEL	40
DS25 SHT1	SURFACE INLET PIT FOR FOOTPATHS	41
DS25 SHT2	SURFACE INLET PIT - GENERAL PURPOSE	42
DS26 SHT1	JUNCTION PIT	43
DS26 SHT2	HEAVY DUTY JUNCTION PIT	44
DS27 SHT1	STANDARD LETTERBOX INLET PIT	45
DS27 SHT2	STANDARD LETTERBOX PIT	46
DS27 SHT3	STANDARD LETTERBOX PIT FOR PIPES UP TO Ø 1350	47
DS28 SHT1	GULLY PIT PIPE UNDER ROADWAY	48
DS28 SHT2	EXTENDED CHAMBER GULLY PIT (FOR EXISTING PIT)	49
DS29	SURFACE INLET PIT FOR DRIVEWAYS	50
DS32 SHT1	SAG PIT ON A CUL-DE-SAC	51
DS32 SHT2	GRATED INSPECTION PIT FOR CUL-DE-SAC WITH CAST IRON INSITU LINTEL	52
DS32 SHT3	INSPECTION PIT FOR FOOTPATH AND ROADWAY SURFACE INLET PIT	53
DS33	SUB SOIL DRAINAGE DETAILS	54
DS34	CONCRETE SUPPORT CRADLE FOR USE ON PIPELINES IN CLOSE PROXIMITY TO SERVICES	55
DS35	PIPE CONVERTER TO 150MM KERB	56
DS36 SHT1	HEADWALLS FOR PIPES UP TO 900 DIAMETER SHEET 1 OF 3	57
DS36 SHT2	HEADWALLS FOR PIPES 1050 TO 1800 DIAMETER SHEET 2 OF 3	58
DS36 SHT3	HEADWALLS ALTERNATE DETAIL OF HEADWALL	59
DS37 SHT1	INSTALLATION OF PIPELINES AND RESTORATION OF TRENCHES DRAINAGE - SECTIONS AND NOTES	60
DS37 SHT2	INSTALLATION OF PIPELINES AND RESTORATION OF TRENCHES FOR SERVICE PIPES - RESIDENTIAL STREET	61
DS38 S1 (A1)	VEHICULAR LIGHT POLES (RAG BOLT FOOTING AND POLE TYPE) SHEET 1 OF 2	62
DS38 S1 (A3)	VEHICULAR LIGHT POLES (RAG BOLT FOOTING AND POLE TYPE) SHEET 1 OF 2	63
DS38 S2 (A1)	VEHICULAR LIGHT POLES (RAG BOLT FOOTING AND POLE TYPE) SHEET 2 OF 2	64
DS38 S2 (A3)	VEHICULAR LIGHT POLES (RAG BOLT FOOTING AND POLE TYPE) SHEET 2 OF 2	65
DS39	CBD STREET TREES	66
DS40 SHT1	CBD PAVING, DRIVEWAY AND KERB RAMP DETAILS	67
DS40 SHT2	CBD PAVING, DRIVEWAY AND KERB RAMP DETAILS	68
DS40 SHT3	CBD PAVING, DRIVEWAY AND KERB RAMP DETAILS	69
DS41 S1 (A1)	SECONDARY TREATMENT AND NEIGHBOURHOOD CENTRE PAVING DESIGN AND SPECIFICATION SHEET 1 OF 2	70
DS41 S1 (A3)	SECONDARY TREATMENT AND NEIGHBOURHOOD CENTRE PAVING DESIGN AND SPECIFICATION SHEET 1 OF 2	71
DS41 S2 (A1)	SECONDARY TREATMENT AND NEIGHBOURHOOD CENTRE PAVING DESIGN AND SPECIFICATION SHEET 2 OF 2	72
DS41 S2 (A3)	SECONDARY TREATMENT AND NEIGHBOURHOOD CENTRE PAVING DESIGN AND SPECIFICATION SHEET 2 OF 2	73
DS42	TURFING DETAIL	74
DS43	TREE PROTECTION TIMBER HOARDING	75
DS44	ACCESS TO MULTI LOTS AND DRAINAGE REQUIREMENTS	76
DS45	GRANITE FOOTPATH PAVING DETAILS SHEETS 1 TO 7	77-83
DS46	STORMWATER OUTLET NATURAL WATERWAY STANDARD DETAIL	84
DS47	TYPICAL SECTIONS ROAD PAVEMENTS	85
DS48	WATTS PROFILE SPEED HUMP	86

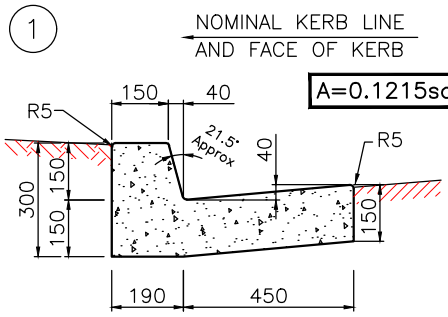

150mm KERB AND GUTTER

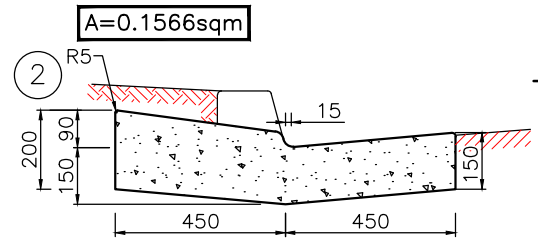

LAYBACK

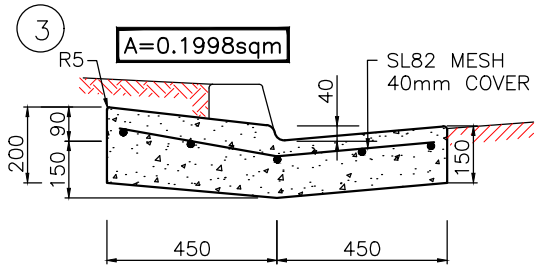

HEAVY DUTY LAYBACK

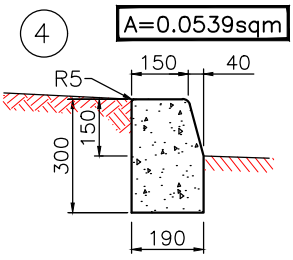

KERB ONLY

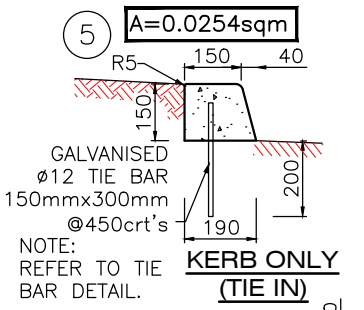

KERB ONLY (TIE IN)

TIE BAR DETAIL

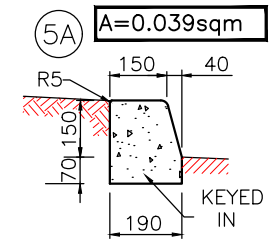

KERB ONLY (KEY IN)

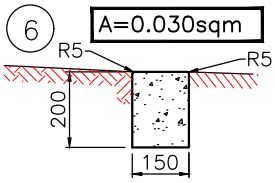

EDGE STRIP

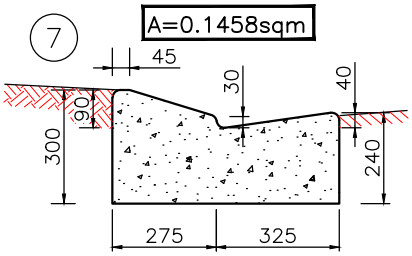

MOUNTABLE KERB AND GUTTER FOR LANEWAYS AND CARPARKS

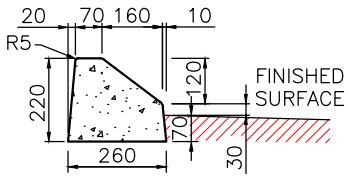

MOUNTABLE KERB (KEY IN)

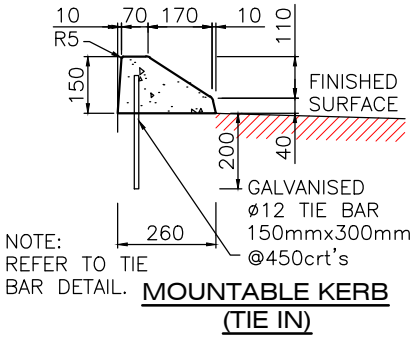

MOUNTABLE KERB (TIE IN)

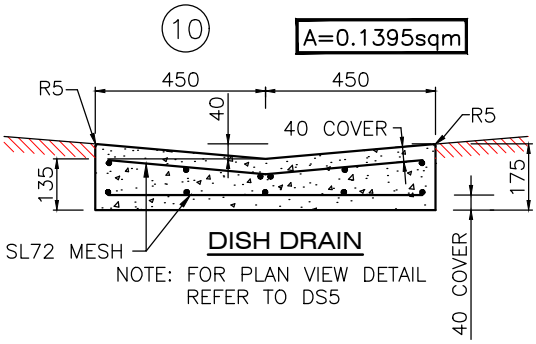

DISH DRAIN

NOTE: FOR PLAN VIEW DETAIL REFER TO DS5

CONCRETE TO BE A MINIMUM OF N25 IN ACCORDANCE WITH AS 1012.9:2014, AS 1379–2007 (R2017) AND AS 3600:2018. ALL CHAMFER/FILLETS ARE RADIUS 20 UNLESS SHOWN OTHERWISE

TIE IN KERBS TO BE ONLY USED AS A LAST ALTERNATIVE. APPROVAL TO BE GIVEN BY COUNCIL'S SUPERVISING ENGINEER ONLY

NOTES

1. ROAD BASE MATERIAL IS TO BE DGB20 OR SIMILAR AND COMPACTED TO 100% STANDARD MAXIMUM DRY DENSITY IN ACCORDANCE WITH AS 1289.5.1.1:2017

2. ROAD BASE MATERIAL 150mm THICK TO BE PLACED BENEATH KERB & GUTTER AND 300mm BEYOND THE EXTERNAL EDGES OF KERB & GUTTERS, APRONS, AND CROSSINGS.

3. ALL DISTURBED AREAS TO BE TOPSOILED WITH 50mm MIN OF APPROVED TURF UNDERLAY AND TURFED AS SOON AS PRACTICABLE TO ENCOURAGE REVEGETATION AND MINIMISE SOIL EROSION FROM SITE.

4. PROVIDE SAWCUT AND REINSTATE 500mm INTO ROAD PAVEMENT FROM FRONT EDGE OF CONCRETE WORKS UNLESS OTHERWISE INSTRUCTED BY COUNCIL'S INSPECTOR.

5. REINSTATE PAVEMENT WITH 175mm DEPTH DEEP LIFT (AC14) COMPACTED TO 95% MODIFIED (97% MAX) TO TfNSW SPECIFICATIONS TD 00018:2021, R116 AND R117. CRACK SEAL ALL BITUMEN TO BITUMEN FACES. AC14 TO BE COMPACTED IN LAYERS. EACH LAYER TO BE OF 40–70mm THICKNESS

6. APPROVED FULL DEPTH EXPANSION JOINTS (10mm) TO BE PROVIDED AS FOLLOWS:
   - BETWEEN NEW AND EXISTING WORKS
   - BETWEEN LAYBACK WINGS AND KERB
   - EITHER SIDE OF ANY LINTELS
   - AT EVERY 6m INTERVALS ALONG CONTINUOUS LENGTHS (PROVIDE A DUMMY JOINT AT EVERY 3m INTERVALS UNLESS INSTRUCTED OTHERWISE BY SUPERINTENDENT)

7. ALL SURFACES TO BE STEEL TROWEL FINISHED.

8. ROOFWATER OUTLETS TO BE APPROVED IN ACCORDANCE WITH STANDARD DRAWING DS2

9. USE CLEAN FILL AS BACKFILL MATERIAL UNLESS INSTRUCTED OTHERWISE

400 200 0 400 800 1200 1600 2000

SCALE OF MILLIMETRES 1:20

DESIGNED / DRAWN Date:	Scale: 1:20 FINAL	CITY OF PARRAMATTA COUNCIL	PLAN N°
DESIGN CHECKED & APPROVED Date:	ASSET OWNER Date:	KERBS AND LAYBACKS	DS1
MANAGER CAPITAL PROJECTS Date:	GROUP MANAGER CITY ASSETS & ENVIRONMENT Date:	SECTION DETAILS AND NOTES	Sheet No : 1 of 1 Revision :

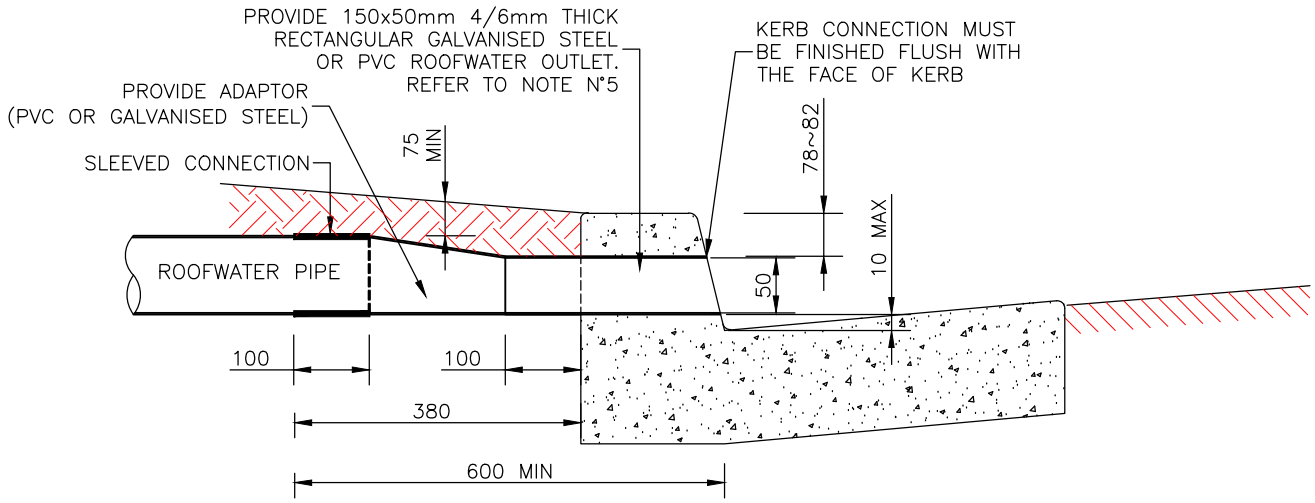

ROOFWATER OUTLET CONNECTION - (FOR NEW KERB AND GUTTER)

SCALE 1:10

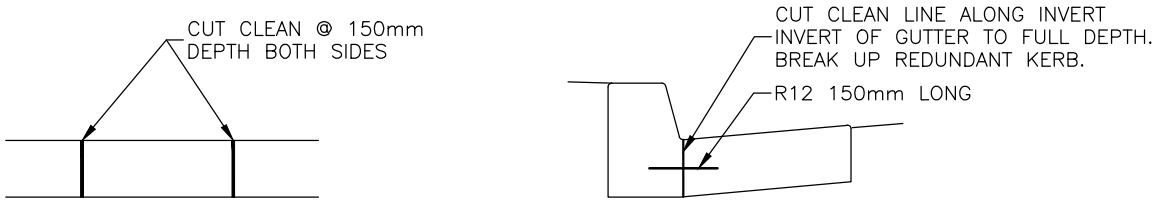

FRONT VIEW PLAN
N.T.S.

PROFILE SECTION
N.T.S.

KERB SAW CUTTING DETAILS - (FOR REPLACEMENT OF EXISTING)

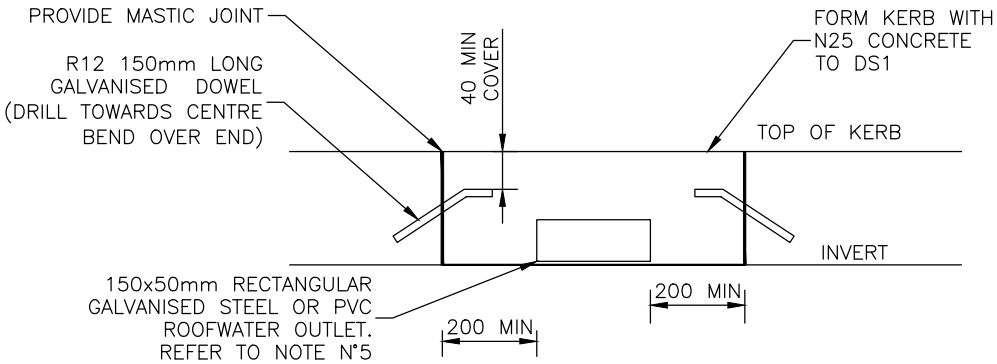

FRONT VIEW SECTION - (FOR REPLACEMENT OF EXISTING)

N.T.S.

NOTES

1. ENSURE THAT ALL CONNECTIONS ARE WATER TIGHT.
2. FOR TRAFFICABLE AREAS SUCH AS DRIVEWAYS, USE RECTANGULAR GALVANISED STEEL ROOFWATER OUTLET FOR FULL LENGTH, EG. BOUNDARY TO KERB.
3. ALL DIMENSIONS ARE IN MILLIMETRES UNLESS OTHERWISE SHOWN.
4. REPLACE EXISTING PIPE SECTION BETWEEN PROPERTY LINE AND KERB FOR ALL KERB AND GUTTER RECONSTRUCTION WORKS.
5. WHERE ROOFWATER OUTLETS ARE LOCATED NEAR DRIVEWAYS, OR UNDER PAVER PAVED FOOTPATH, OUTLET IS TO BE GALVANISED STEEL RC 150 x 50 SECTION FULL LENGTH. CONNECTION TO KERB SHALL BE POSITIONED A MINIMUM 600mm FROM THE DRIVEWAY. OUTLETS ELSEWHERE MAY BE PVC UNLESS DIRECTED OTHERWISE.
6. THE CONTRACTOR SHALL TAKE PHOTOGRAPH(S) SHOWING EACH PIPE STORMWATER CONNECTION ALONG THE FOOTPATH IN RELATION TO THE PROPERTY AND STREET KERB PRIOR TO BACKFILL OF TRENCH. EACH PHOTOGRAPH SHALL HAVE A DATE STAMP AND BE PROVIDED TO COUNCIL FOR THEIR RECORDS.

SCALE OF MILLIMETRES 1:10

DESIGNED / DRAWN Date:	Scale: AS SHOWN **FINAL**	**CITY OF PARRAMATTA COUNCIL**	PLAN N°
DESIGN CHECKED & APPROVED Date:	ASSET OWNER Date:	ROOFWATER OUTLET	DS2
MANAGER CAPITAL PROJECTS Date:	GROUP MANAGER CITY ASSETS & ENVIRONMENT Date:	SECTION DETAILS AND NOTES	Sheet No : 1 of 1 Revision :

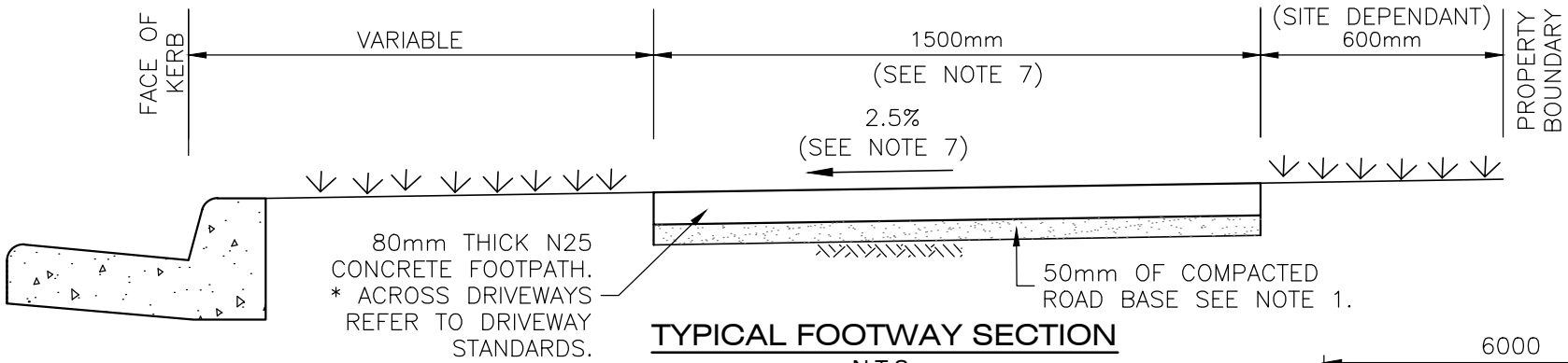

TYPICAL FOOTWAY SECTION

N.T.S.

NOTES

1. BASE MATERIAL IS TO BE DGB20 OR SIMILAR. COMPACT TO 100% STANDARD MAXIMUM DRY DENSITY IN ACCORDANCE WITH A.S. 1289.5.1.1:2017
2. CONCRETE IS TO BE N25 IN ACCORDANCE WITH AS 1379–2007 (R2017) AND AS 3600:2018
3. PROVIDE FULL DEPTH EXPANSION JOINT 10mm WIDE AT 6m SPACING, PROVIDE TOOL JOINTS 10mm WIDE BY A MINIMUM OF 20mm DEPTH AT 1.5m SPACING.
4. ALL SURFACES TO BE BROOM FINISHED AT 90° TO DIRECTION OF TRAVEL AND EDGES TO BE ROUNDED TO 20 RADIUS USING AN EDGING TOOL. (NO WOOD FLOAT FINISH PERMITTED)
5. ADJOINING NATURAL FOOTWAY IS TO BE CUT OR FILLED WITH TOPSOIL AS REQUIRED TO GRADE EVENLY TO THE FOOTPATH. ALL DISTURBED AREAS TO BE TOPSOILED WITH 50mm MIN APPROVED TURF UNDERLAY AND TURFED AS SOON AS PRACTICABLE TO ENCOURAGE REVEGETATION AND MINIMISE SOIL EROSION FROM SITE, OR REINSTATED AS DIRECTED BY COUNCIL'S INSPECTOR OR PROJECT MANAGER. REFER TO COUNCIL'S STD DWG DS42
6. LONGITUDINAL TRANSITIONS IN GRADE TO MATCH EXISTING VEHICULAR FOOTWAY CROSSING (VFCs) ARE NOT TO EXCEED A GRADE OF 1 IN 14 TO COMPLY WITH AS 1428.1–2009
7. FOOTPATH WIDTH AND CROSS FALL AS SHOWN ABOVE UNLESS DIRECTED OTHERWISE BY THE SUPERINTENDENT / PROJECT MANAGER
8. PROVIDE ARTICULATED JOINT IF FOOTPATH IS ADJACENT TO TREES AND WHERE DIFFERENTIAL SOIL MOVEMENT IS EXPECTED.
9. ALL DIMENSIONS ARE IN MILLIMETRES UNLESS OTHERWISE SHOWN.

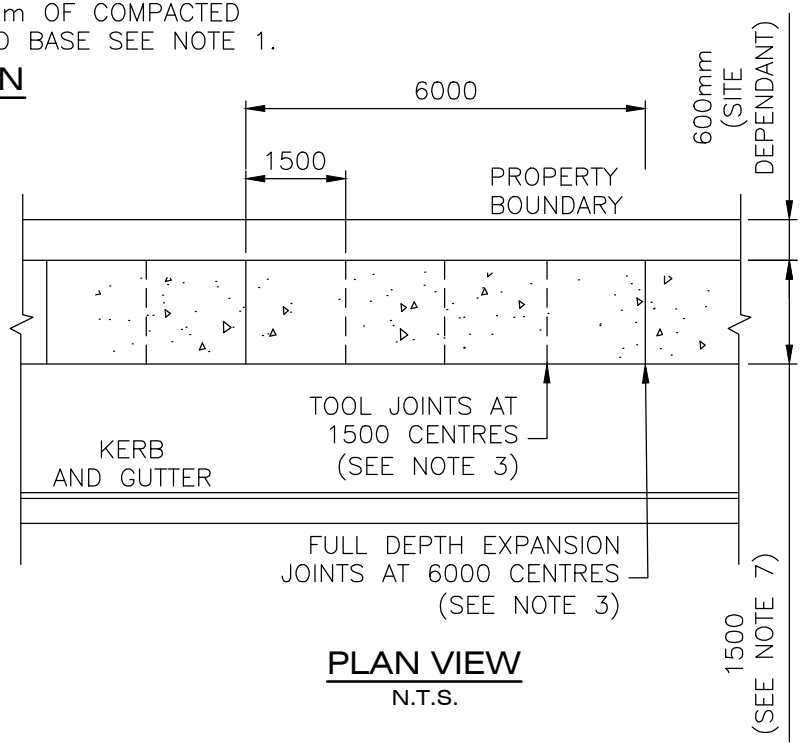

PLAN VIEW

N.T.S.

NOTE:
FOR ARTICULATED JOINT DETAILS AT TREES REFER TO DS3A

AMENDMENTS			
No.	DETAIL	DATE	CHECKED

DESIGNED / DRAWN Date:
DESIGN CHECKED & APPROVED Date:
MANAGER CAPITAL PROJECTS Date:

Scale: N.T.S. **FINAL**
ASSET OWNER Date:
GROUP MANAGER CITY ASSETS & ENVIRONMENT Date:

CITY OF PARRAMATTA COUNCIL

FOOTPATH

SECTION DETAILS AND NOTES

PLAN N° DS3
Sheet No : 1 of 1
Revision :

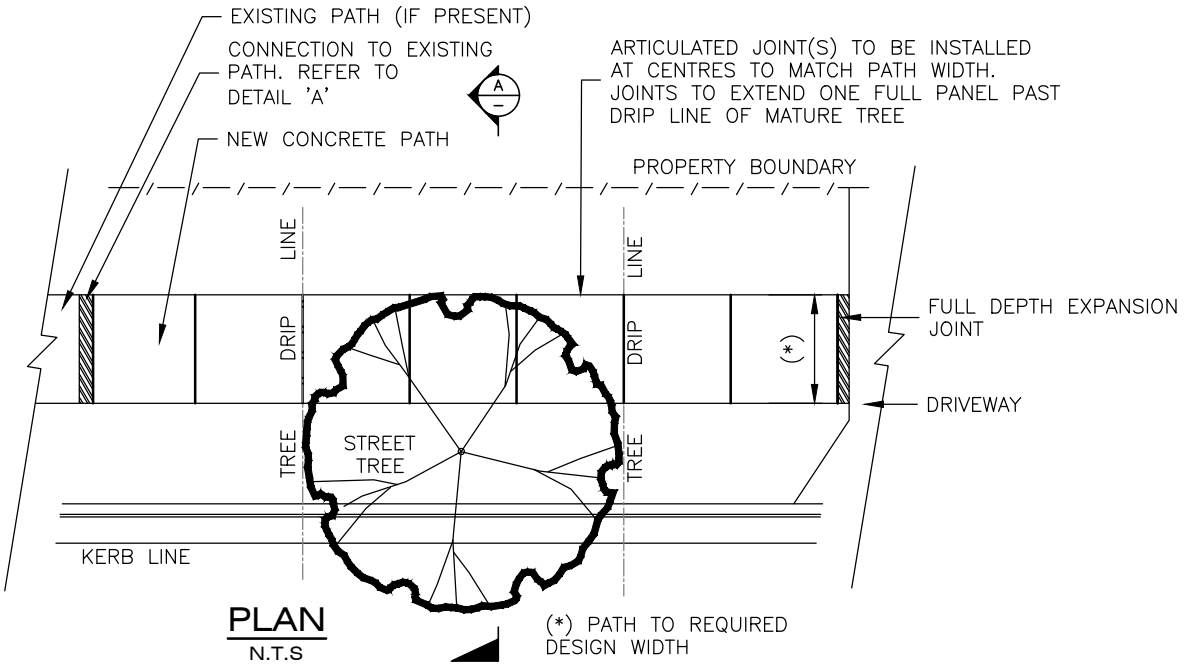

PLAN
N.T.S

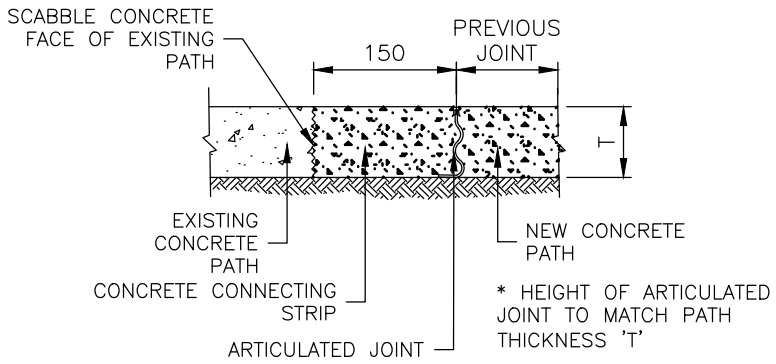

DETAIL 'A'
CONNECTING TO EXISTING PATH
N.T.S

NOTE:
FOR TYPICAL FOOTPATH SECTION AND NOTES REFER TO DS3

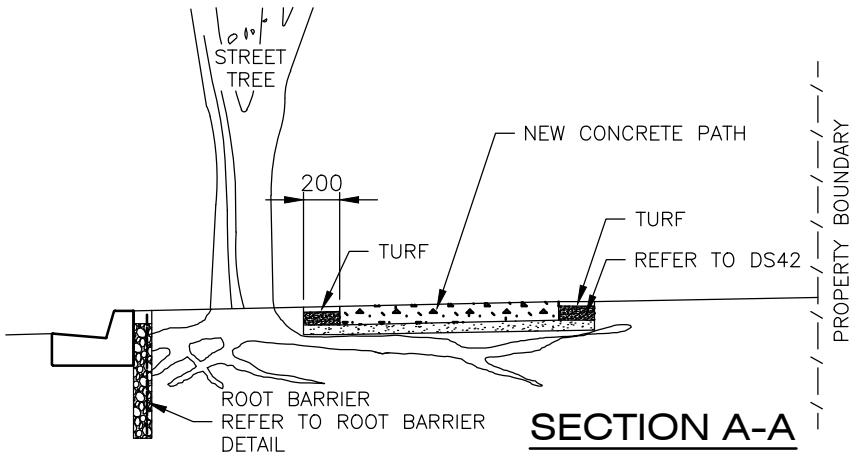

SECTION A-A
N.T.S

NOTES

1. ARTICULATED JOINT SYSTEM (LOCK JOINT OR APPROVED EQUIVALENT) AT CENTRES TO MATCH PATH WIDTH. (EG. 1500 CTRS FOR 1500 WIDE PATH, 3000 CTRS FOR 3000 WIDE PATH). JOINTS TO EXTEND ONE PANEL PAST DRIP–LINE OF MATURE TREE OR MINIMUM OF FIVE JOINTS, WHICHEVER IS GREATER.

AMENDMENTS			
No.	DETAIL	DATE	CHECKED

DESIGNED / DRAWN Date:
DESIGN CHECKED & APPROVED Date:
MANAGER CAPITAL PROJECTS Date:

Scale: N.T.S. **FINAL**
ASSET OWNER Date:
GROUP MANAGER CITY ASSETS & ENVIRONMENT Date:

CITY OF PARRAMATTA COUNCIL

FOOTPATH
ARTICULATE JOINT DETAIL AT TREES
SECTION DETAILS AND NOTES

PLAN N° DS3A
Sheet No : 1 of 1
Revision :

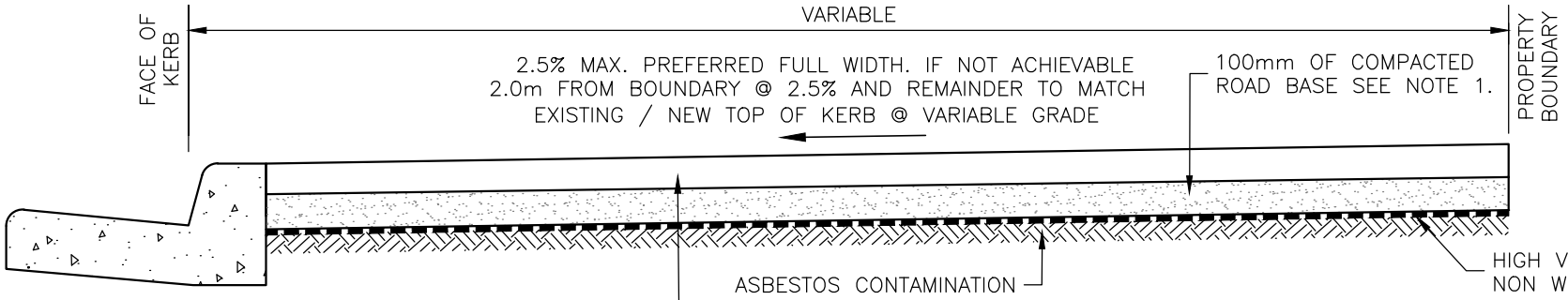

NOTE:
FOR JOINT DETAILS AND REINFORCEMENT SPECIFICATIONS REFER TO COUNCIL'S STD DWG DS6

TYPICAL FOOTWAY SECTION

N.T.S.

NOTES

1. BASE MATERIAL IS TO BE DGB20 OR SIMILAR. COMPACT TO 100% STANDARD MAXIMUM DRY DENSITY IN ACCORDANCE WITH A.S. 1289.5.1.1:2017
2. CONCRETE IS TO BE N25 IN ACCORDANCE WITH AS 1379–2007 (R2017) AND AS 3600:2018
3. PROVIDE FULL DEPTH EXPANSION JOINT 10mm WIDE AT 6m SPACING, PROVIDE TOOL JOINTS 10mm WIDE BY A 25mm (D/4) AT 1.5m SPACING.
4. ALL SURFACES TO BE BROOM FINISHED AT 90° TO DIRECTION OF TRAVEL AND EDGES TO BE ROUNDED TO 20 RADIUS USING AN EDGING TOOL. (NO WOOD FLOAT FINISH PERMITTED)
5. WHERE FOOTPATH IS NOT FULL WIDTH ADJOINING NATURAL FOOTWAY IS TO BE CUT OR FILLED WITH TOPSOIL AS REQUIRED TO GRADE EVENLY TO THE FOOTPATH. ALL DISTURBED AREAS TO BE TOPSOILED WITH 75mm APPROVED LOAM AND TURFED AS SOON AS PRACTICABLE TO ENCOURAGE REVEGETATION AND MINIMISE SOIL EROSION FROM SITE, OR REINSTATED AS DIRECTED BY COUNCIL'S INSPECTOR OR PROJECT MANAGER.
6. LONGITUDINAL TRANSITIONS IN GRADE TO MATCH EXISTING VEHICULAR FOOTWAY CROSSING (VFCs) ARE NOT TO EXCEED A GRADE OF 1 IN 14 TO COMPLY WITH AS 1428.1–2009
7. FOOTPATH CROSS FALL TO MATCH EXISTING UNLESS DIRECTED OTHERWISE BY THE SUPERINTENDENT / PROJECT MANAGER
8. PROVIDE ARTICULATED JOINT IF FOOTPATH IS ADJACENT TO TREES AND WHERE DIFFERENTIAL SOIL MOVEMENT IS EXPECTED.
9. ALL DIMENSIONS ARE IN MILLIMETRES UNLESS OTHERWISE SHOWN.

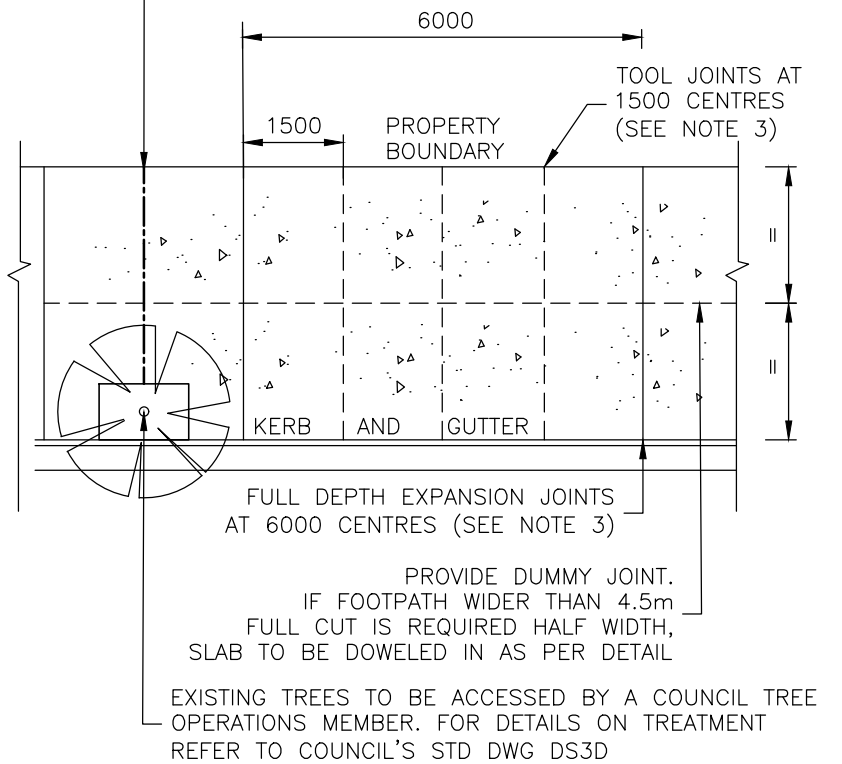

AMENDMENTS			
No.	DETAIL	DATE	CHECKED

DESIGNED / DRAWN Date:
DESIGN CHECKED & APPROVED Date:
MANAGER CAPITAL PROJECTS Date:

Scale: N.T.S. **FINAL**
ASSET OWNER Date:
GROUP MANAGER CITY ASSETS & ENVIRONMENT Date:

CITY OF PARRAMATTA COUNCIL

ASBESTOS AFFECTED FOOTPATH SITES
CONCRETE

SECTION DETAILS AND NOTES

PLAN N° DS3B
Sheet No : 1 of 1
Revision :

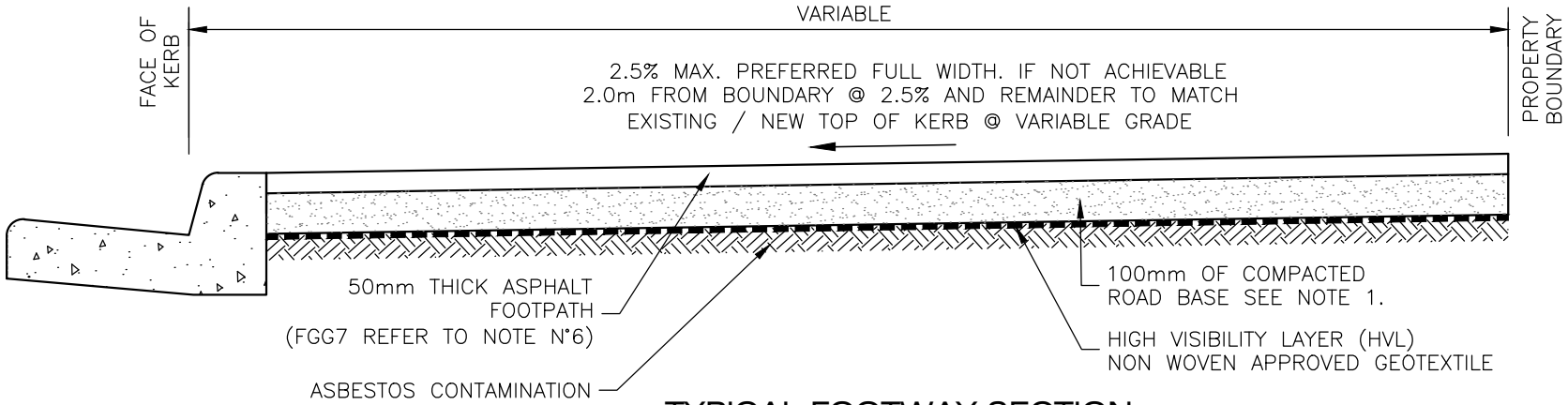

TYPICAL FOOTWAY SECTION

N.T.S.

NOTES

1. BASE MATERIAL IS TO BE DGB20 OR SIMILAR. COMPACT TO 100% STANDARD MAXIMUM DRY DENSITY IN ACCORDANCE WITH A.S. 1289.5.1.1:2017
2. WHERE FOOTPATH IS NOT FULL WIDTH ADJOINING NATURAL FOOTWAY IS TO BE CUT OR FILLED WITH TOPSOIL AS REQUIRED TO GRADE EVENLY TO THE FOOTPATH. ALL DISTURBED AREAS TO BE TOPSOILED WITH 75mm APPROVED LOAM AND TURFED AS SOON AS PRACTICABLE TO ENCOURAGE REVEGETATION AND MINIMISE SOIL EROSION FROM SITE, OR REINSTATED AS DIRECTED BY COUNCIL'S INSPECTOR OR PROJECT MANAGER.
3. LONGITUDINAL TRANSITIONS IN GRADE TO MATCH EXISTING VEHICULAR FOOTWAY CROSSING (VFCs) ARE NOT TO EXCEED A GRADE OF 1 IN 14 TO COMPLY WITH AS 1428.1–2009
4. FOOTPATH WIDTH AND CROSS FALL TO MATCH EXISTING UNLESS DIRECTED OTHERWISE BY THE SUPERINTENDENT / PROJECT MANAGER
5. ALL DIMENSIONS ARE IN MILLIMETRES UNLESS OTHERWISE SHOWN.
6. 50mm AC FGG7, APPLY BITUMEN EMULSION TACK COAT AT $0.15L/m^2$ TO ROAD BASE. FINISH AC WITH CARBORUNDUM COATING

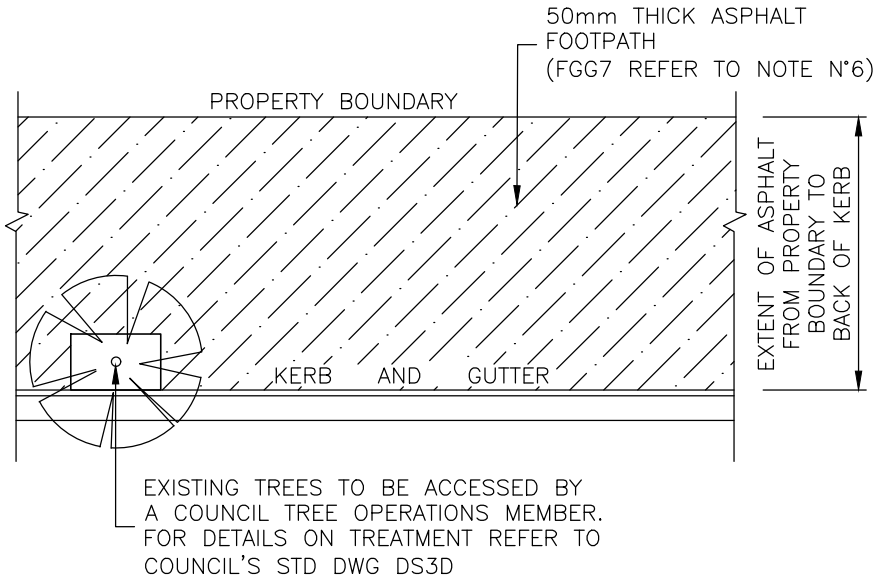

PLAN VIEW

N.T.S.

AMENDMENTS			
No.	DETAIL	DATE	CHECKED

DESIGNED / DRAWN Date:

DESIGN CHECKED & APPROVED Date:

MANAGER CAPITAL PROJECTS Date:

Scale: N.T.S. **FINAL**

ASSET OWNER Date:

GROUP MANAGER CITY ASSETS & ENVIRONMENT Date:

CITY OF PARRAMATTA COUNCIL

ASBESTOS AFFECTED FOOTPATH SITES
ASPHALT

SECTION DETAILS AND NOTES

PLAN N° DS3C

Sheet No : 1 of 1

Revision :

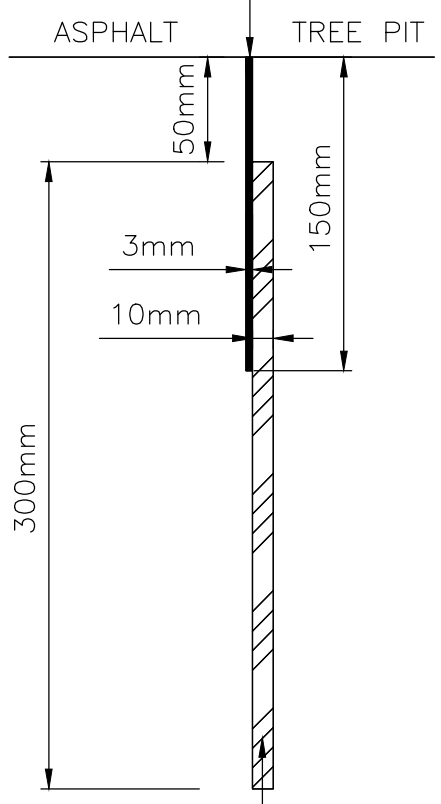

STEEL EDGE DETAIL

N.T.S.

RETAIN AND PROTECT EXISTING TREE AND TREE ROOTS DURING CONSTRUCTION WORKS. HAND EXCAVATE AROUND PROPOSED TREE PIT TO MAX. 140mm BELOW PROPOSED FINISHED PAVEMENT LEVEL TO ALLOW FOR PROPOSED POROUS PAVEMENT AND BASE COURSE MATERIAL. DO NOT DAMAGE ROOTS.

POROUS PAVEMENT. DEPTH 40mm
SUPPLIER: FILTAPAVE SUSTAINABLE PAVEMENTS (www.filtapave.com.au)
TYPE: FILTAPAVE POROUS PAVEMENT INCLUDING GRADED AGGREGATE, RECYCLED GRANULES, AND BINDER.
AGGREGATE COLOUR: GREY / CHARCOAL (CITY OF PARRAMATTA COUNCIL STANDARD).
INSTALLATION: PLACE POROUS PAVEMENT OVER COMPACTED RIVER GRAVEL. INSTALL AS PER MANUFACTURER'S INSTRUCTIONS. TROWEL POROUS PAVEMENT TO AN EVEN SURFACE FINISHING FLUSH TO ADJACENT PAVEMENTS.

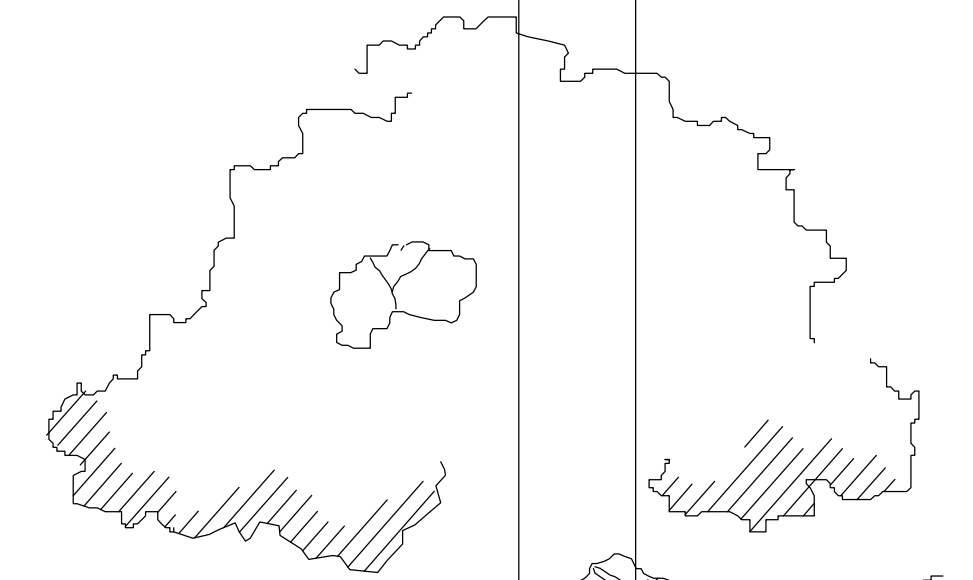

10mmØ x MIN 300mm LENGTH STEEL ANCHOR RODS SET 50mm BELOW TOP OF STEEL EDGE. PLACE AT MAX. 1.5m CENTRES AND AT JOINS IN STEEL. SPOT WELD ANCHOR STRIP TO STEEL EDGE. PAINT WELDS WITH RUST RESISTANT PAINT

HIGH VISIBILITY LAYER (HVL) NON WOVEN APPROVED GEOTEXTILE

100mm DEPTH RIVER GRAVEL (7 – 2mm GRADED, NO FINES) HAND COMPACTED IN 50mm DEPTH LAYERS. FINISH 40mm DEPTH FROM PAVEMENT

50mm COMPACTED DGB20 OR SIMILAR

CONCRETE FINISH REFER TO DS3B FOR DETAILS

HIGH VISIBILITY LAYER (HVL) NON WOVEN APPROVED GEOTEXTILE

D

EXISTING KERB AND GUTTER

ASBESTOS CONTAMINATION

3D (MIN 1m)

CONCRETE

N.T.S.

STEEL EDGE DURAGAL HEAVY DUUTY GALVANISED. (USED FOR ASPHALT ONLY.) REFER TO DETAIL ABOVE

ASPHALT FINISH REFER TO DS3C FOR DETAILS

50mm COMPACTED DGB20 OR SIMILAR

EXISTING KERB AND GUTTER

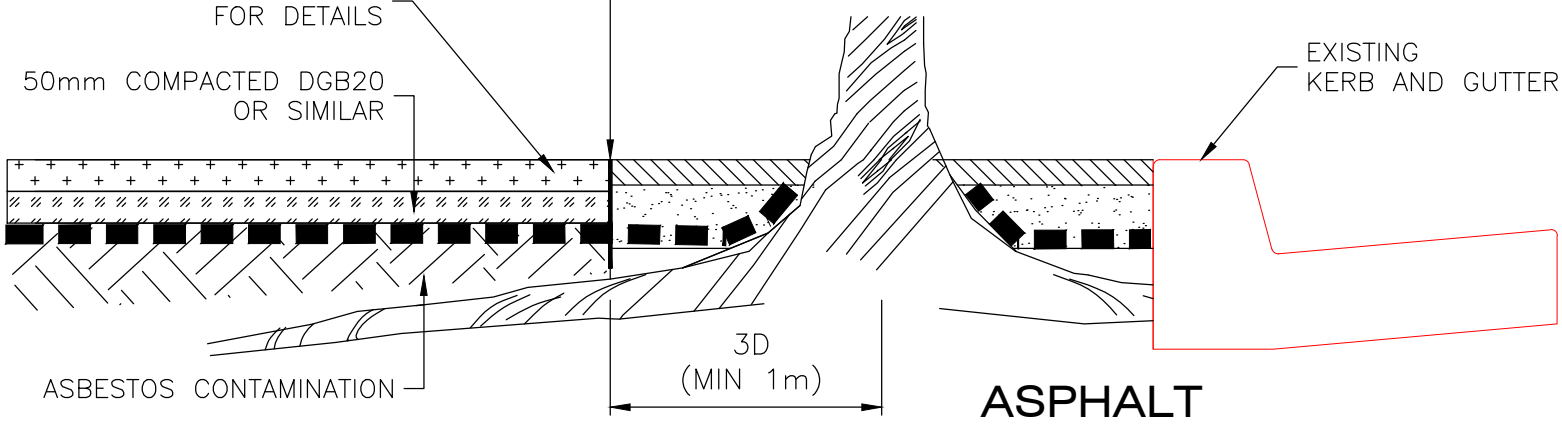

ASBESTOS CONTAMINATION

3D (MIN 1m)

ASPHALT

N.T.S.

DESIGNED / DRAWN Date:	Scale: N.T.S Status: FINAL	CITY OF PARRAMATTA COUNCIL	PLAN N°
DESIGN CHECKED & APPROVED Date:	ASSET OWNER Date:	ASBESTOS AFFECTED FOOTPATH SITES CONCRETE AND ASPHALT AT EXISTING TREE LOCATIONS	DS3D
MANAGER CAPITAL PROJECTS Date:	GROUP MANAGER CITY ASSETS & ENVIRONMENT Date:	Page 8 of 86 SECTION DETAILS AND NOTES	Sheet No : 1 Revision :

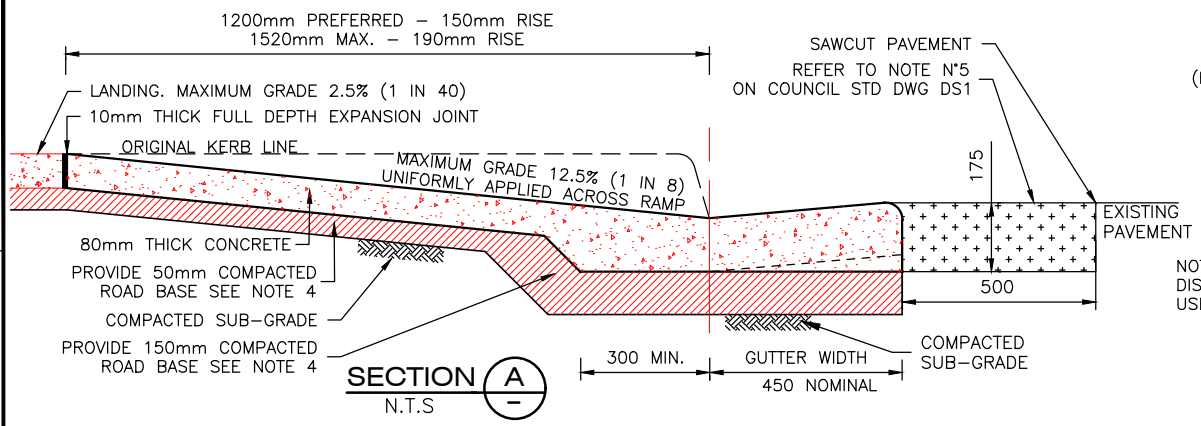

SECTION A
N.T.S

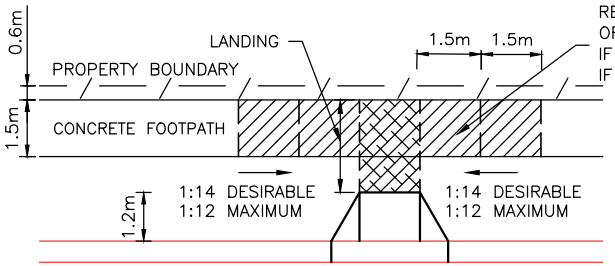

RECONSTRUCT FOOTPATH MINIMUM 1 PANEL, OR AS REQUIRED (1 PANEL LENGTH 1.5m)
IF 2m REQUIRED, RECONSTRUCT TO 2 PANELS (3.0m)
IF 3m REQUIRED, RECONSTRUCT TO 3 PANELS (4.5m)

FOOTPATH TRANSITION PLAN
N.T.S

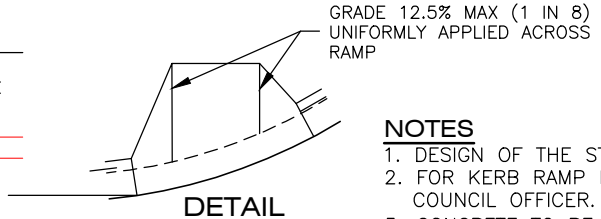

DETAIL
N.T.S

FOOTPATH TRANSITION PROFILE
N.T.S

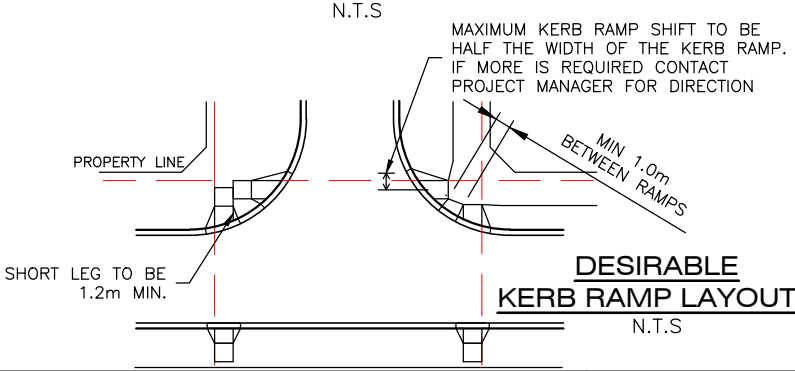

DESIRABLE KERB RAMP LAYOUTS
N.T.S

$\tan \alpha = \frac{a}{b} = \frac{a}{b}$

$\therefore a = \tan \alpha \times b$

$\tan 30^\circ = 0.577$

(HENCE APPROXIMATE DIMENSION)

b = 1.2 ⇒ a = 0.7	
b = 1.5 ⇒ a = 0.85	
b = 1.8 ⇒ a = 1.05	
b = 2.1 ⇒ a = 1.2	
b = 2.4 ⇒ a = 1.4	

NOTE:
DISREGARD ARC LENGTH, USE CHORD LENGTH

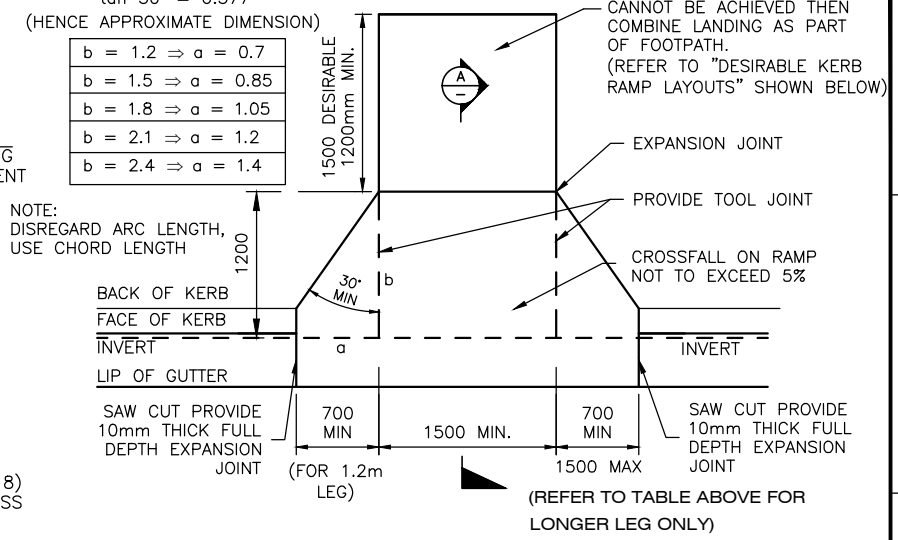

TYPICAL PLAN OF KERB
N.T.S

NOTES

1. DESIGN OF THE STANDARD KERB RAMP IS BASED ON AS 1428.1:2021
2. FOR KERB RAMP LOCATION REFER TO DESIGN PLANS OR AS INSTRUCTED BY CITY OF PARRAMATTA COUNCIL OFFICER.
3. CONCRETE TO BE N25 IN ACCORDANCE WITH AS 1379–2007 (R2017) AND AS 3600:2018
4. ROAD BASE MATERIAL IS TO BE DGB20 OR SIMILAR. COMPACT TO 100% STANDARD MAXIMUM DRY DENSITY IN ACCORDANCE WITH A.S 1289.5.1.1:2017
5. KERB RAMP TO BE POURED AS ONE PIECE WITH GUTTER, NO CONSTRUCTION JOINTS WILL BE ALLOWED.
6. PLAIN CONCRETE SURFACES TO BE FINISHED AS FOLLOWS;
   RAMP– BROOM FINISH
   GUTTER– STEEL TROWEL FINISH
7. ALL KERB RAMPS ARE TO BE ALIGNED WITH THE DESIRED DIRECTION OF PEDESTRIAN TRAVEL. (SEE "DESIRABLE KERB RAMP LAYOUTS".)
8. AT PEDESTRIAN CROSSINGS/REFUGES THE WIDTH OF THE RAMP SHOULD BE AS WIDE AS THE DEVICE OPENING.
9. SHOULD DESIGN DIMENSIONS NOT BE ACHIEVABLE, CONTACT COUNCIL'S INSPECTOR.
10. CONTACT COUNCIL'S INSPECTOR PRIOR TO COMMENCEMENT OF THE WORKS FOR
    – PRE INSPECTION (TO DETERMINE SCALE OF WORKS) (AN ADDITIONAL FEE FOR PRE INSPECTION IS REQUIRED.)
    – FORMWORK INSPECTION
    – ALL DISTURBED AREAS TO BE TOPSOILED AND TURFED FLUSH WITH ALL CONCRETE WORKS PRIOR TO FINAL INSPECTION.
11. TOOL JOINT TO BE 25% OF THE DEPTH OF THE SLAB DEEP.
12. ALL DIMENSIONS ARE IN MILLIMETRES UNLESS OTHERWISE SHOWN.

AMENDMENTS

No.	DETAIL	DATE	CHECKED

DESIGNED / DRAWN Date:
DESIGN CHECKED & APPROVED Date:
MANAGER CAPITAL PROJECTS Date:

Scale: AS SHOWN **FINAL**
ASSET OWNER Date:
GROUP MANAGER CITY ASSETS & ENVIRONMENT Date:

CITY OF PARRAMATTA COUNCIL

KERB RAMP

PLAN VIEW, SECTION DETAILS AND NOTES

PLAN N° DS4
Sheet No : 1 of 1
Revision :

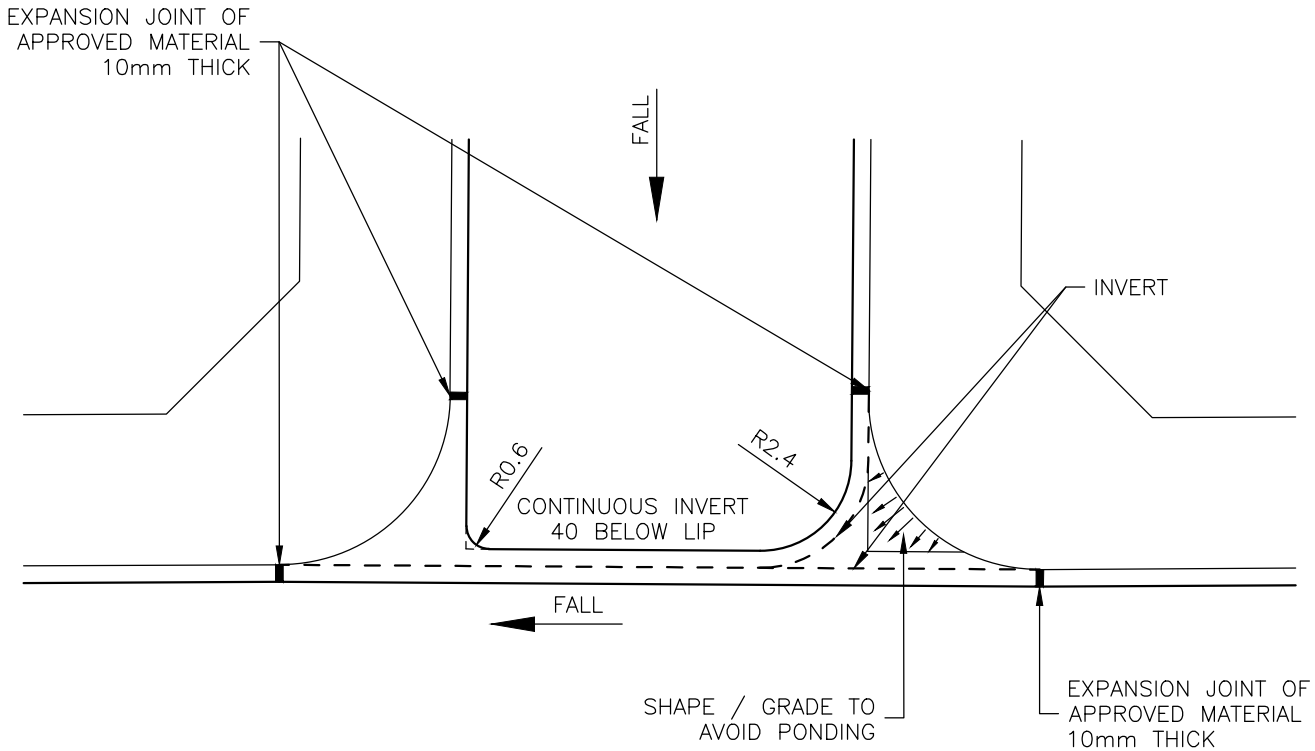

DISH DRAIN

N.T.S.

NOTES

1. GUTTER TO BE REINFORCED WITH SL72 MESH AND FORMED INTEGRAL WITH KERBS.
2. FOR DISH DRAIN PROFILE DETAIL REFER TO DS1 TYPE "11"
3. ALL DIMENSIONS ARE IN METRES UNLESS SHOWN OTHERWISE.

AMENDMENTS			
No.	DETAIL	DATE	CHECKED

DESIGNED / DRAWN Date:

DESIGN CHECKED & APPROVED Date:

MANAGER CAPITAL PROJECTS Date:

Scale: N.T.S. **FINAL**

ASSET OWNER Date:

GROUP MANAGER CITY ASSETS & ENVIRONMENT Date:

CITY OF PARRAMATTA COUNCIL

DISH DRAIN
CROSSING DETAIL

PLAN VIEW AND NOTES

PLAN N° DS5

Sheet No : 1 of 1

Revision :

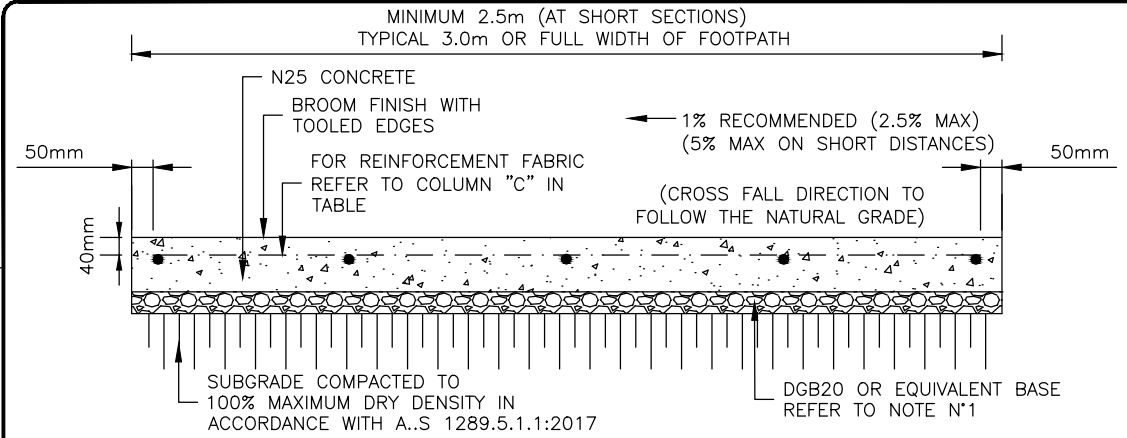

SECTION DETAIL A

N.T.S.

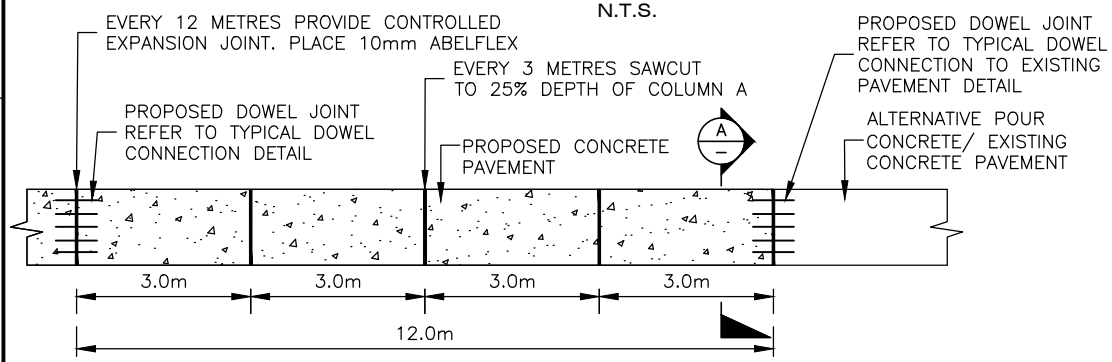

PLAN VIEW

N.T.S.

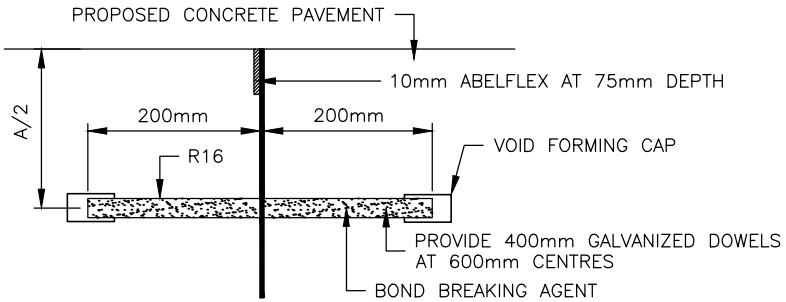

TYPICAL DOWEL CONNECTION

N.T.S.

PAVEMENT APPLICATION TYPE \ DETAIL	TYPE	A	B	C
		CONCRETE DEPTH(mm)	BASE DEPTH (mm)	FABRIC
GENERAL USE	1	100	100	* SL72
HEAVY VEHICLES (CROSSINGS/PARKS)	2	125	150	* SL72
HEAVY DUTY	3	150	150	* SL82

* ALTERNATIVE FOR REINFORCED CONCRETE – USE FIBRE–CRETE TO EQUIVALENT REINFORCEMENT STRENGTH, NO STEEL FIBRES.

NOTES

1. BASE MATERIAL IS TO BE DGB20 OR AN APPROVED EQUIVALENT, COMPACTED TO 100% MAXIMUM DRY DENSITY IN ACCORDANCE WITH 1289.5.1.1:2017
2. SUBGRADE IS TO BE PROOF ROLLED USING A VEHICLE SUITABLY LOADED TO IMPOSE A 10 TONNE AXLE LOAD. THE SUPERVISING ENGINEER/PROJECT MANAGER MAY DIRECT THE CONTRACTOR TO TEST ANY SOFT AND YIELDING AREAS USING A DYNAMIC CONE PENETROMETER (DCP). SUBGRADE AREAS WHERE THE DCP READING IS >85mm /BLOW (CBR<=2%) SHALL BE EXCAVATED TO A DEPTH AS DIRECTED BY THE SUPERVISING ENGINEER/PROJECT MANAGER.
3. ALL SURFACES TO BE BROOM FINISHED WITH TOOLED EDGES.
4. ALL DISTURBED AREAS TO BE TOPSOILED WITH 75mm APPROVED LOAM AND TURFED FLUSH WITH ALL CONCRETE WORKS.
5. EXPANSION JOINTS
   MATERIAL: 10mm WIDE ABELFLEX OR APPROVED EQUIVALENT.
   PLACING: USE PLACING METHODS WHICH MINIMISE PLASTIC SETTLEMENT AND SHRINKAGE CRACKING. FINISH VISIBLE JOINTING MATERIAL NEATLY FLUSH WITH ADJOINING SURFACES, UNLESS OTHERWISE SHOWN ON DRAWINGS.
6. ALTERNATELY POURED CONCRETE CYCLEWAYS TO BE INSTALLED IN 12m BAYS.

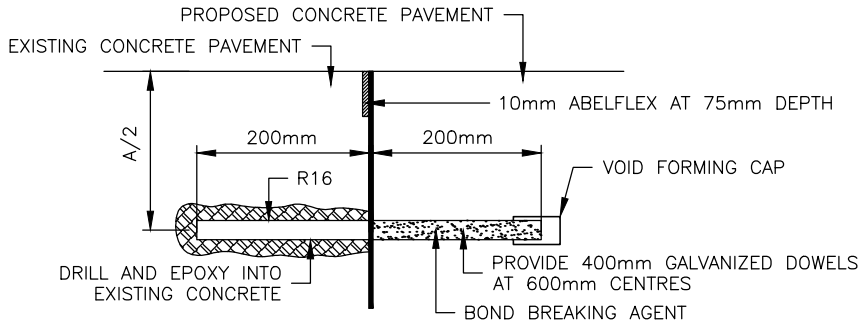

TYPICAL DOWEL CONNECTION TO EXISTING PAVEMENT

N.T.S.

AMENDMENTS			
No.	DETAIL	DATE	CHECKED

DESIGNED / DRAWN Date:
DESIGN CHECKED & APPROVED Date:
MANAGER CAPITAL PROJECTS Date:

Scale: AS SHOWN **FINAL**
ASSET OWNER Date:
GROUP MANAGER CITY ASSETS & ENVIRONMENT Date:

CITY OF PARRAMATTA COUNCIL

TYPICAL CYCLEWAY/SHARED PATHWAY (CONTINUOUS AND ALTERNATE CONCRETE POURS)

SECTION DETAILS AND NOTES

PLAN N° DS6

Sheet No : 1 of 1

Revision :

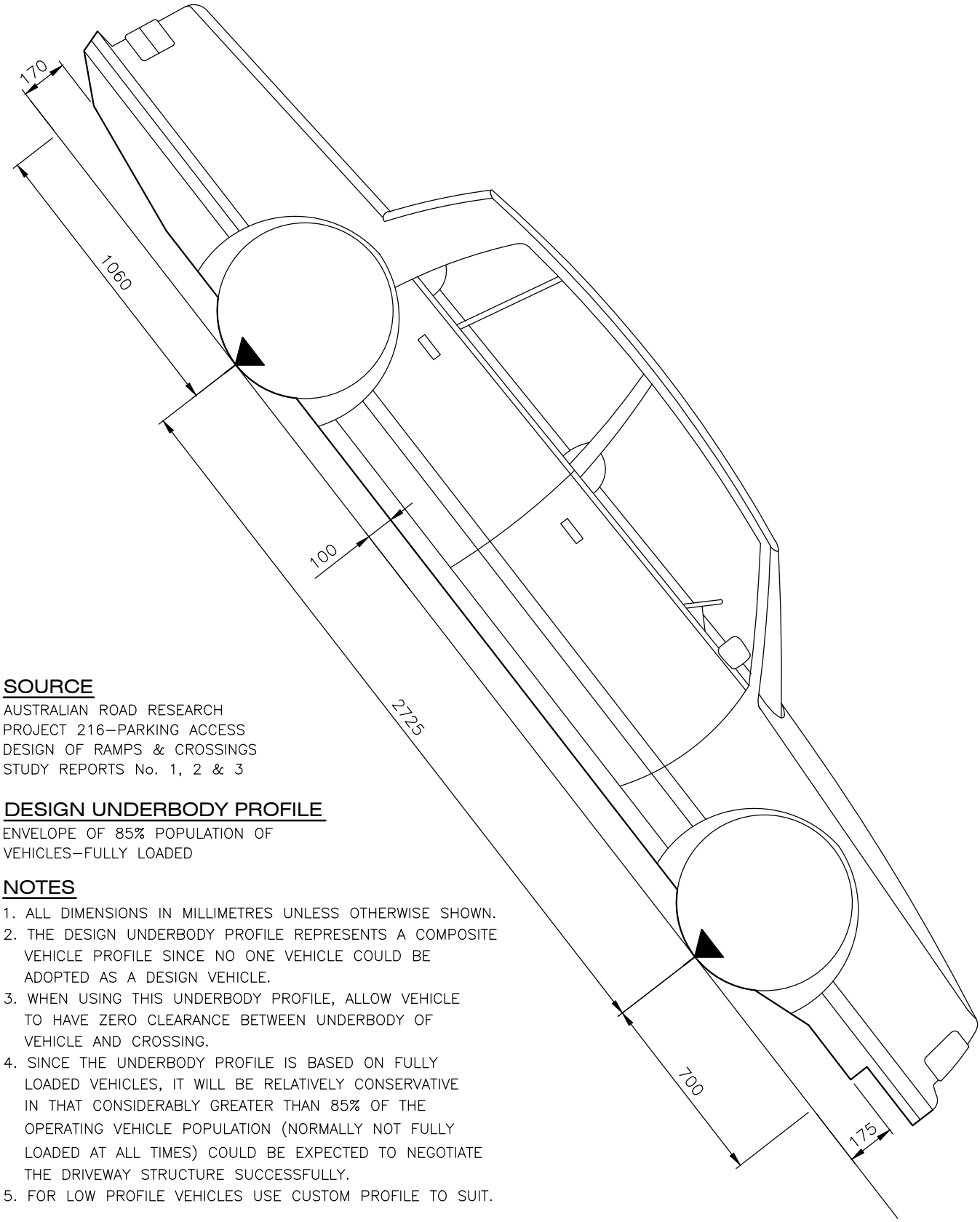

SOURCE

AUSTRALIAN ROAD RESEARCH
PROJECT 216–PARKING ACCESS
DESIGN OF RAMPS & CROSSINGS
STUDY REPORTS No. 1, 2 & 3

DESIGN UNDERBODY PROFILE

ENVELOPE OF 85% POPULATION OF
VEHICLES–FULLY LOADED

NOTES

1. ALL DIMENSIONS IN MILLIMETRES UNLESS OTHERWISE SHOWN.
2. THE DESIGN UNDERBODY PROFILE REPRESENTS A COMPOSITE VEHICLE PROFILE SINCE NO ONE VEHICLE COULD BE ADOPTED AS A DESIGN VEHICLE.
3. WHEN USING THIS UNDERBODY PROFILE, ALLOW VEHICLE TO HAVE ZERO CLEARANCE BETWEEN UNDERBODY OF VEHICLE AND CROSSING.
4. SINCE THE UNDERBODY PROFILE IS BASED ON FULLY LOADED VEHICLES, IT WILL BE RELATIVELY CONSERVATIVE IN THAT CONSIDERABLY GREATER THAN 85% OF THE OPERATING VEHICLE POPULATION (NORMALLY NOT FULLY LOADED AT ALL TIMES) COULD BE EXPECTED TO NEGOTIATE THE DRIVEWAY STRUCTURE SUCCESSFULLY.
5. FOR LOW PROFILE VEHICLES USE CUSTOM PROFILE TO SUIT.

400 200 0 400 800 1200 1600 2000

SCALE OF MILLIMETRES 1:20

DESIGNED / DRAWN Date:	Scale: AS SHOWN **FINAL**	**CITY OF PARRAMATTA COUNCIL**	PLAN N°
DESIGN CHECKED & APPROVED Date:	ASSET OWNER Date:	PASSENGER CAR CLEARANCE PROFILE	DS7
MANAGER CAPITAL PROJECTS Date:	GROUP MANAGER CITY ASSETS & ENVIRONMENT Date:	PROFILE AND NOTES	Sheet No : 1 of 1
			Revision :

LEGEND

BF BACK OF FOOTPATH
FF FRONT OF FOOTPATH
INV INVERT

DIRECTION OF BROOM FINISH

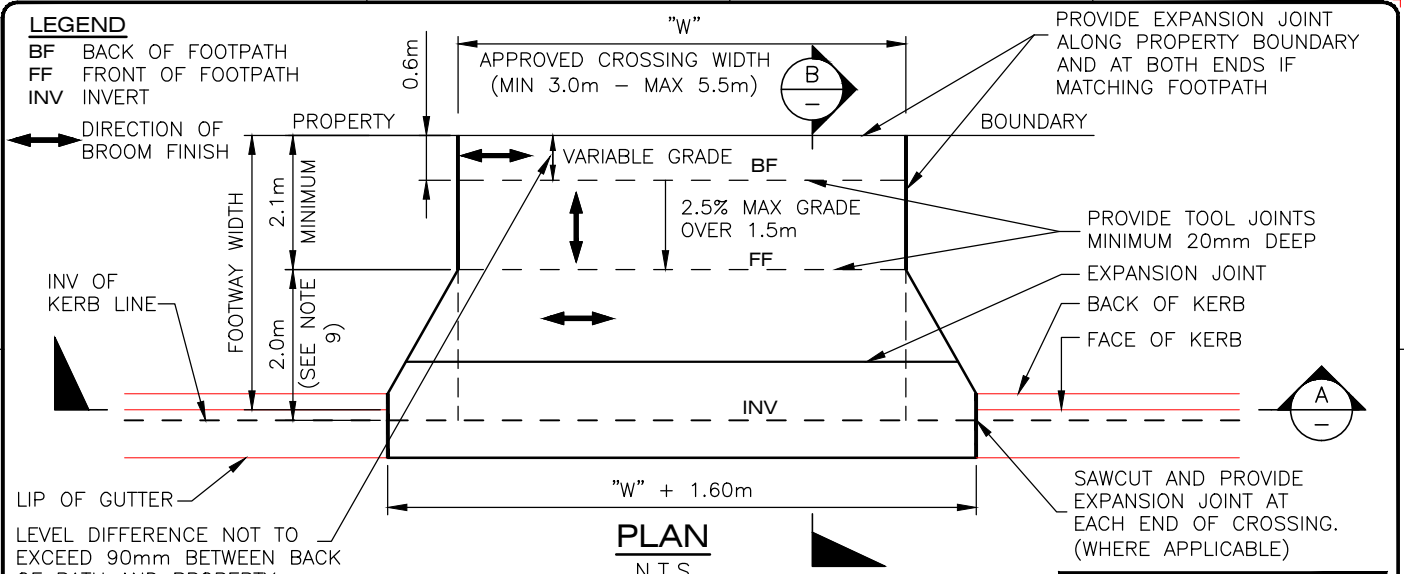

LEVEL DIFFERENCE NOT TO EXCEED 90mm BETWEEN BACK OF PATH AND PROPERTY BOUNDARY

PLAN
N.T.S

DRIVEWAYS TO BE LAID IN PLAIN CONCRETE, NO COLORING, STAMPING OR STENCIL PATTERNS BETWEEN PROPERTY BOUNDARY AND BACK OF LAYBACK.

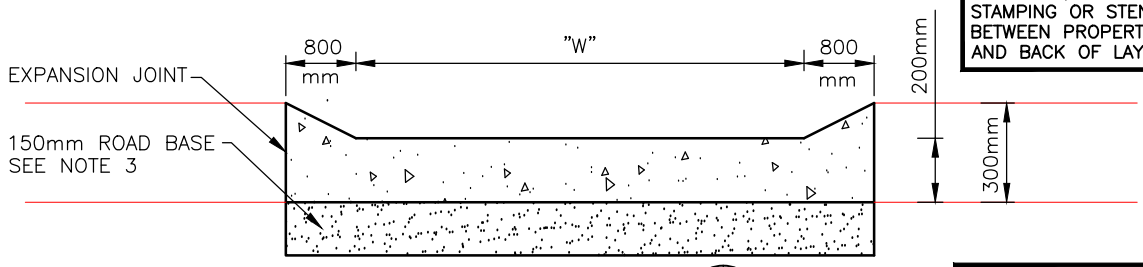

MINIMUM COVER FOR REINFORCEMENT 40mm FOR PAVEMENTS LESS THAN 150mm THICK AND 50mm FOR PAVEMENTS GREATER THAN OR EQUAL TO 150mm THICK

SECTION A
N.T.S

SAWCUT AND REINSTATE 500mm MINIMUM INTO ROAD PAVEMENT FROM FRONT EDGE OF CONCRETE WORKS UNLESS OTHERWISE INSTRUCTED BY COUNCIL'S INSPECTOR

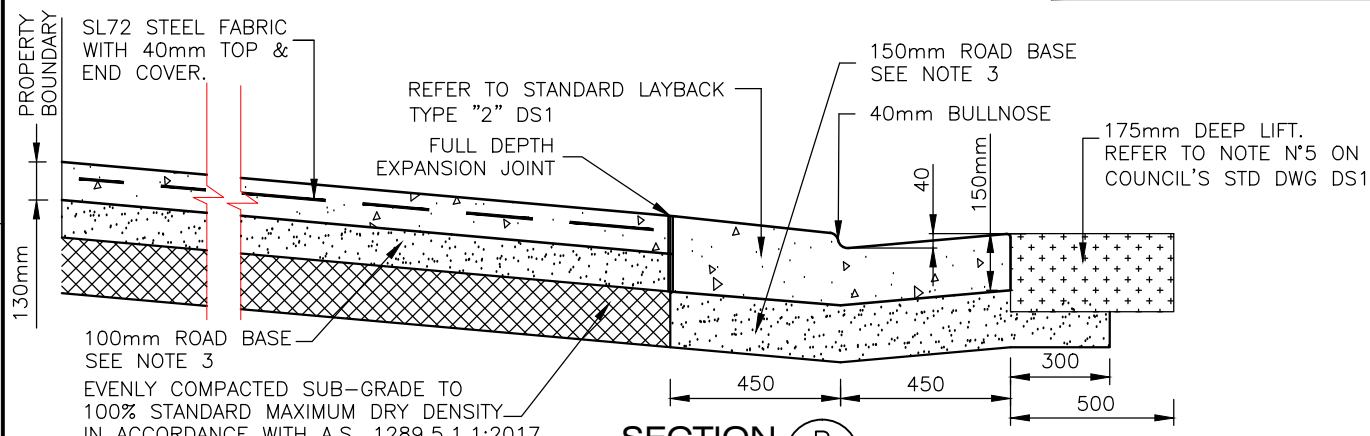

SECTION B
SCALE 1:20

* CONCRETE TO BE A MINIMUM OF N25 IN ACCORDANCE WITH AS 1379–2007 (R2017) AND AS 3600:2018.

NOTES

1. ALL EXISTING KERB AND GUTTER SHALL BE REMOVED PRIOR TO ANY NEW LAYBACK WORKS UNLESS OTHERWISE DIRECTED BY COUNCIL'S INSPECTOR AT PRE–INSPECTION.
2. VEHICULAR CROSSING LEVELS TO BE IN ACCORDANCE WITH COUNCIL'S STD DWG DS10 AND DETAILED DESIGN.
3. ROAD BASE MATERIAL IS TO BE DGB20 OR SIMILAR AND COMPACTED TO 100% STANDARD MAXIMUM DRY DENSITY IN ACCORDANCE WITH A.S. 1289.5.1.1:2017
4. ALL DISTURBED AREAS TO BE TOPSOILED WITH 50mm MIN OF APPROVED TURF UNDERLAY AND TURFED AS SOON AS PRACTICABLE (PRIOR TO FINAL INSPECTION) TO ENCOURAGE REVEGETATION AND MINIMISE SOIL EROSION FROM SITE. REFER TO COUNCIL'S STD DWG DS42
5. EXISTING CONCRETE FOOTPAVING IS TO BE RECONSTRUCTED AS REQUIRED BY COUNCIL'S INSPECTOR OR PROJECT MANAGER TO MATCH THE CROSSING.
6. THE FOOTWAY IS TO BE SHAPED AS REQUIRED BY COUNCIL'S INSPECTOR OR PROJECT MANAGER TO THE CROSSING EVENLY.
7. THIS PLAN DOES NOT APPLY FOR FOOTWAY WIDTHS LESS THAN 2.8m.
8. ALL SURFACES TO BE BROOM FINISHED.
9. USE 2.0m, IF DISTANCE BETWEEN INVERT AND FRONT OF FOOTPATH IS 2.0m OR GREATER, WHERE DISTANCE IS LESS THAN 2.0m WING TO MATCH FRONT OF FOOTPATH

400 200 0 400 800 1200 1600 2000

SCALE OF MILLIMETRES 1:20

DESIGNED / DRAWN Date:	Scale: AS SHOWN **FINAL**	**CITY OF PARRAMATTA COUNCIL**	PLAN N°
DESIGN CHECKED & APPROVED Date:	ASSET OWNER Date:	VEHICULAR CROSSING	DS8
MANAGER CAPITAL PROJECTS Date:	GROUP MANAGER CITY ASSETS & ENVIRONMENT Date:	PLAN, SECTIONS AND NOTES	Sheet No : 1 of 1 Revision :

LEGEND

BF BACK OF FOOTPATH
FF FRONT OF FOOTPATH
INV INVERT
DIRECTION OF BROOM FINISH

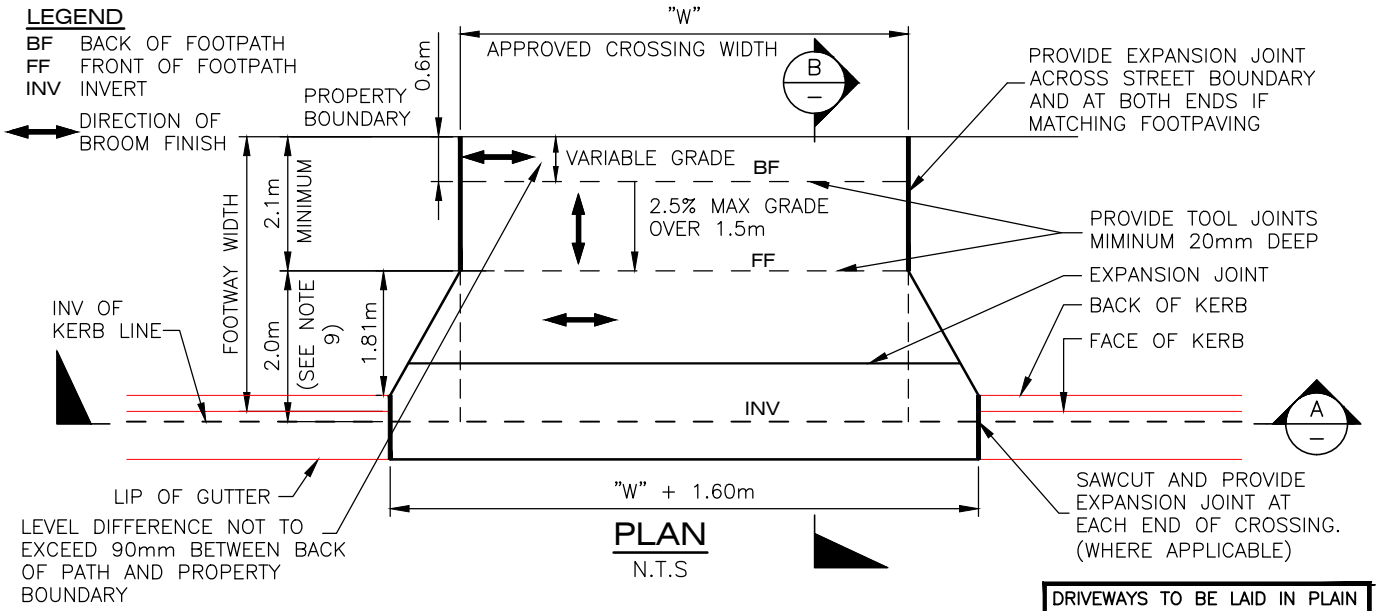

PLAN
N.T.S

DRIVEWAYS TO BE LAID IN PLAIN CONCRETE, NO COLORING, STAMPING OR STENCIL PATTERNS BETWEEN PROPERTY BOUNDARY AND BACK OF LAYBACK.

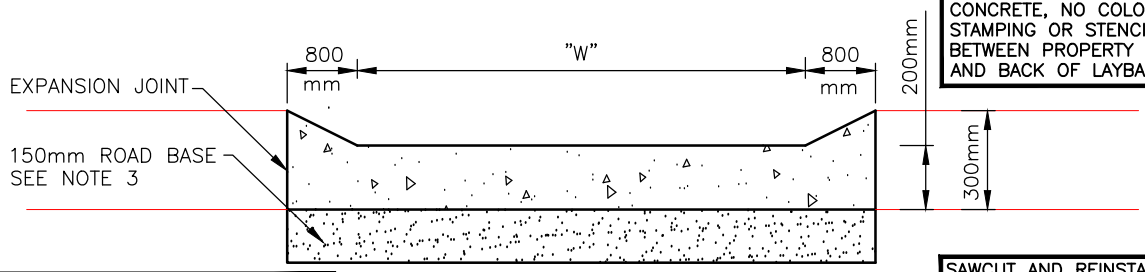

SECTION A
N.T.S

MINIMUM COVER FOR REINFORCEMENT 40mm FOR PAVEMENTS LESS THAN 150mm THICK AND 50mm FOR PAVEMENTS GREATER THAN OR EQUAL TO 150mm THICK

SAWCUT AND REINSTATE 500mm MINIMUM INTO ROAD PAVEMENT FROM FRONT EDGE OF CONCRETE WORKS UNLESS OTHERWISE INSTRUCTED BY COUNCIL'S INSPECTOR

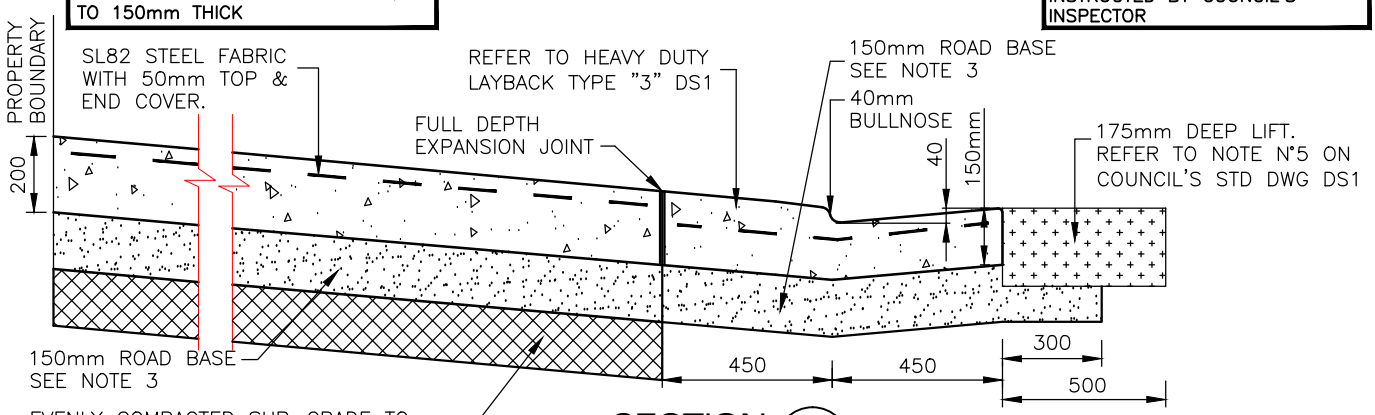

SECTION B
SCALE 1:20

* CONCRETE TO BE A MINIMUM OF N25 IN ACCORDANCE WITH AS 1379-2007 (R2017) AND AS 3600:2018

NOTES

1. ALL EXISTING KERB AND GUTTER SHALL BE REMOVED PRIOR TO ANY NEW LAYBACK WORKS UNLESS OTHERWISE DIRECTED BY COUNCIL'S INSPECTOR AT PRE-INSPECTION.
2. VEHICULAR CROSSING LEVELS TO BE IN ACCORDANCE WITH COUNCIL'S STD DWG DS10 AND DETAILED DESIGN.
3. ROAD BASE MATERIAL IS TO BE DGB20 OR SIMILAR AND COMPACTED TO 100% STANDARD MAXIMUM DRY DENSITY IN ACCORDANCE WITH A.S. 1289.5.1.1:2017
4. ALL DISTURBED AREAS TO BE TOPSOILED WITH 50mm MIN OF APPROVED TURF UNDERLAY AND TURFED AS SOON AS PRACTICABLE (PRIOR TO FINAL INSPECTION) TO ENCOURAGE REVEGETATION AND MINIMISE SOIL EROSION FROM SITE. REFER TO COUNCIL'S STD DWG DS42
5. EXISTING CONCRETE FOOTPAVING IS TO BE RECONSTRUCTED AS REQUIRED BY COUNCIL'S INSPECTOR OR PROJECT MANAGER TO MATCH THE CROSSING.
6. THE FOOTWAY IS TO BE SHAPED AS REQUIRED BY COUNCIL'S INSPECTOR OR PROJECT MANAGER TO THE CROSSING EVENLY.
7. THIS PLAN DOES NOT APPLY FOR FOOTWAY WIDTHS LESS THAN 2.8m.
8. ALL SURFACES TO BE BROOM FINISHED.
9. USE 2.0m, IF DISTANCE BETWEEN INVERT AND FRONT OF FOOTPATH IS 2.0m OR GREATER, WHERE DISTANCE IS LESS THAN 2.0m WING TO MATCH FRONT OF FOOTPATH

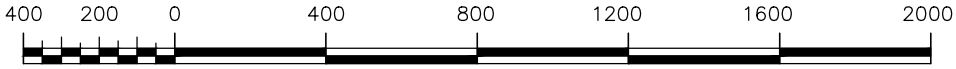

SCALE OF MILLIMETRES 1:20

DESIGNED / DRAWN Date:	Scale: AS SHOWN **FINAL**	**CITY OF PARRAMATTA COUNCIL**	PLAN N°
DESIGN CHECKED & APPROVED Date:	ASSET OWNER Date:	HEAVY DUTY VEHICULAR CROSSING	DS9
MANAGER CAPITAL PROJECTS Date:	GROUP MANAGER CITY ASSETS & ENVIRONMENT Date:	PLAN, SECTIONS AND NOTES	Sheet No : 1 of 1
			Revision :

THESE PROFILES ARE TO BE USED AS A GUIDE ONLY.
EACH DRIVEWAY SHOULD BE DESIGNED TO AVOID SCRAPING, DRAINAGE PROBLEMS AND CONFLICTS WITH OSD LEVELS .

ROAD CROSSFALL WILL AFFECT MAXIMUM ALLOWABLE GRADES

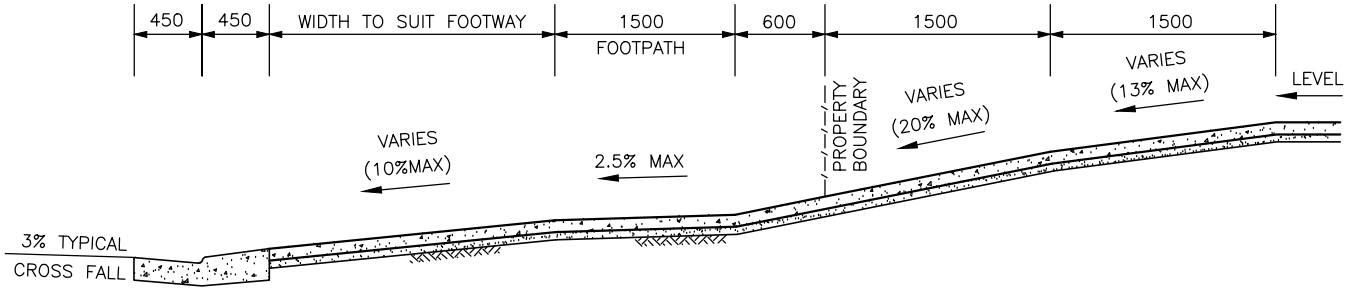

VEHICULAR CROSSING: HIGH LEVEL TYPICAL SECTION

N.T.S.

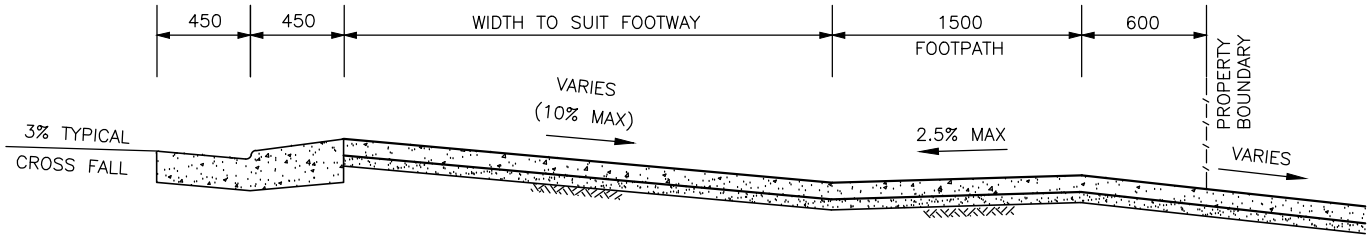

VEHICULAR CROSSING: LOW LEVEL TYPICAL SECTION

N.T.S.

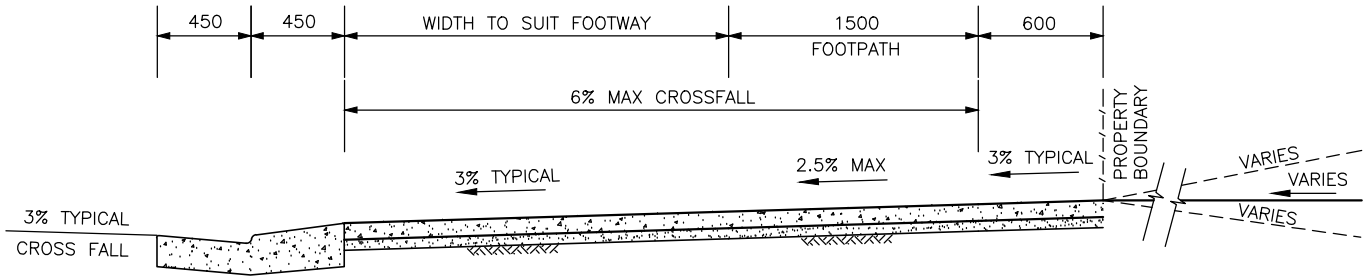

VEHICULAR CROSSING: NORMAL LEVEL TYPICAL SECTION

N.T.S.

ALL DIMENSIONS SHOWN ARE IN MILLIMETRES

NOTES

1. MAX CROSSFALLS ARE ADVISORY ONLY. MAXIMUM LEVELS WILL ONLY BE APPROVED BY COUNCIL IN EXCEPTIONAL CIRCUMSTANCES. ANY OTHER GRADE ARRANGEMENT (DRIVEWAY DESIGN) SHALL BE DESIGNED BY A SUITABLY QUALIFIED, PROFESSIONAL ENGINEER AND LONGITUDINAL SECTION IN 1:20 SCALE SHALL BE SUBMITTED TO COUNCIL FOR FORMAL CHECK AND APPROVAL. PLAN TO SHOW CORRECT ROAD CROSSFALL.

2. CROSSING LEVELS TO BE DESIGNED TO ALLOW COUNCIL'S STANDARD CAR (85% VEHICLE) TO PASS WITHOUT SCRAPING. (COUNCIL STANDARD DRAWING DS7)

3. SPECIAL CONSIDERATION IS REQUIRED TO ALLOW "NON-STANDARD" AND "MODIFIED" VEHICLES TO CROSS WITHOUT SCRAPING E.G. A STANDARD VEHICLE MODIFIED WITH A TOW BAR, TRAILER, ETC.

4. VEHICULAR CROSSINGS CAN ONLY BE CONSTRUCTED IN ACCORDANCE WITH COUNCIL APPROVED PLANS AND TO RELEVANT COUNCIL STANDARD DRAWING DS8 OR DS9.

5. FOOTPAVING EXPANSION JOINTS SHALL BE PREFORMED BITUMEN IMPREGNATED FIBREBOARD 10mm WIDE, FULL CONCRETE DEPTH AT NO MORE THAN 6m SPACING WITH TOOLED 20mm (MINIMUM) DEEP, 10mm WIDE JOINTS AT 1.5m SPACING.

6. ALL WORKMANSHIP AND MATERIALS TO RELEVANT, AUSPEC AND AUSTRALIAN STANDARDS

DESIGNED / DRAWN Date:	Scale: AS SHOWN **FINAL**	**CITY OF PARRAMATTA COUNCIL**	PLAN N°
DESIGN CHECKED & APPROVED Date:	ASSET OWNER Date:	VEHICULAR CROSSING PROFILES	DS10
MANAGER CAPITAL PROJECTS Date:	GROUP MANAGER CITY ASSETS & ENVIRONMENT Date:	SECTIONS AND NOTES	Sheet No : 1 of 1 Revision :

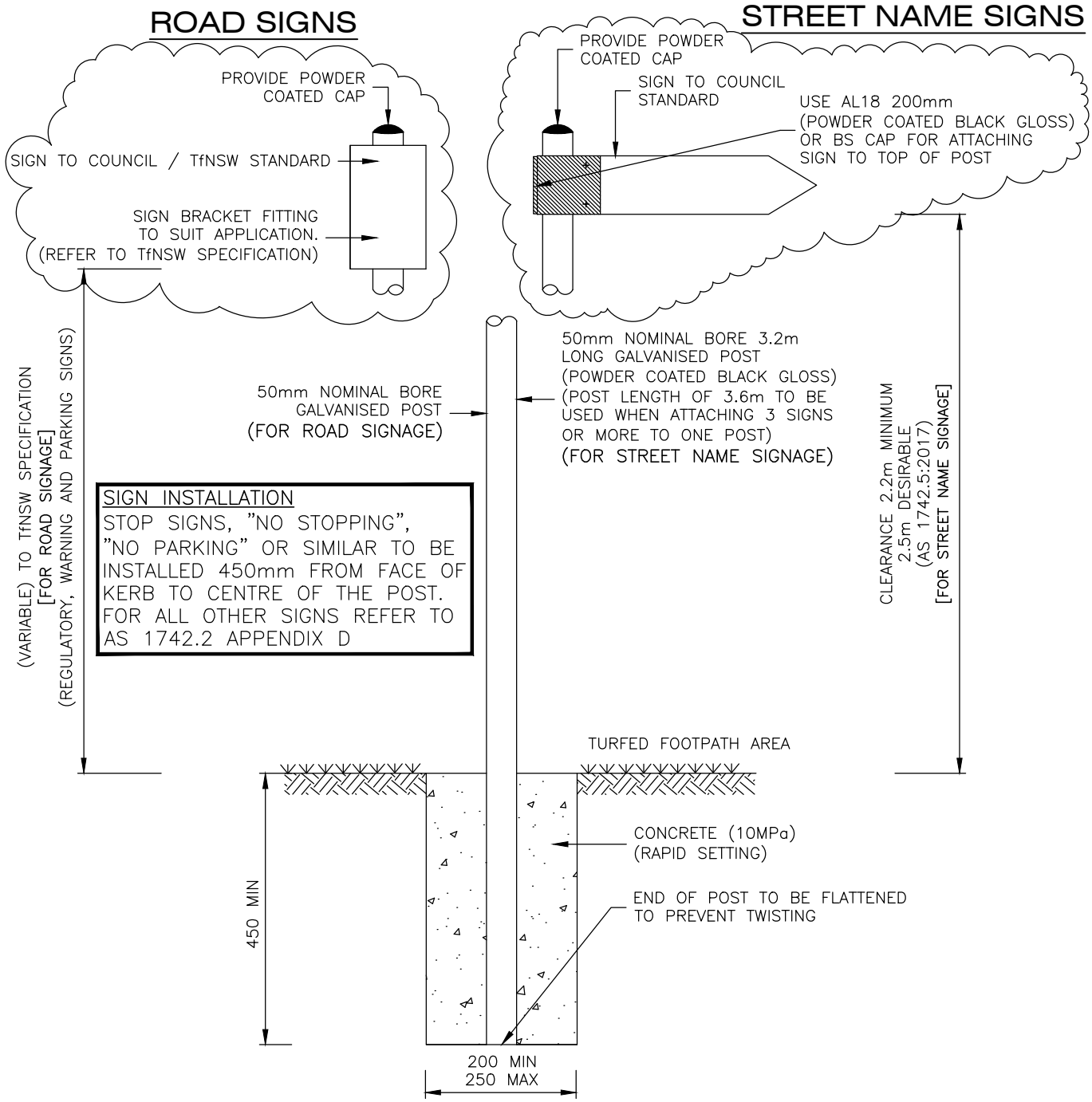

SIGN POST SUPPORT

SCALE 1:10

NOTES

1. A HOLE 450mm DEEP MINIMUM IS DUG, FLATTEN THE END OF THE POST PRIOR TO IT BEING INSERTED. THE POST IS TO BE HELD VERTICALLY WHILE THE HOLE IS FILLED WITH 10MPa CONCRETE. IT IS PREFERABLE FOR THE CONCRETE TO BE ALLOWED TO SET BEFORE THE SIGN IS FASTENED TO THE POST.
2. WHERE THE DEPTH OF THE HOLE NEEDS TO BE VARIED. APPROVAL IS TO BE OBTAINED FROM THE SUPERINTENDENT OR PROJECT MANAGER.
3. ALL DIMENSIONS ARE IN MILLIMETRES UNLESS OTHERWISE SHOWN.
4. CHECK WITH DBYD PLANS (DIAL 1100) BEFORE EXCAVATING POST HOLE.

200 100 0 200 400 600 800 1000

SCALE OF MILLIMETRES 1:10

DESIGNED / DRAWN Date:	Scale: AS SHOWN	FINAL	CITY OF PARRAMATTA COUNCIL	PLAN N°
DESIGN CHECKED & APPROVED Date:	ASSET OWNER Date:		SIGN POST SUPPORT (IN TURFED FOOTPATH AREA)	DS11
MANAGER CAPITAL PROJECTS Date:	GROUP MANAGER CITY ASSETS & ENVIRONMENT Date:		SECTION DETAIL AND NOTES	Sheet No : 1 of 1 Revision :

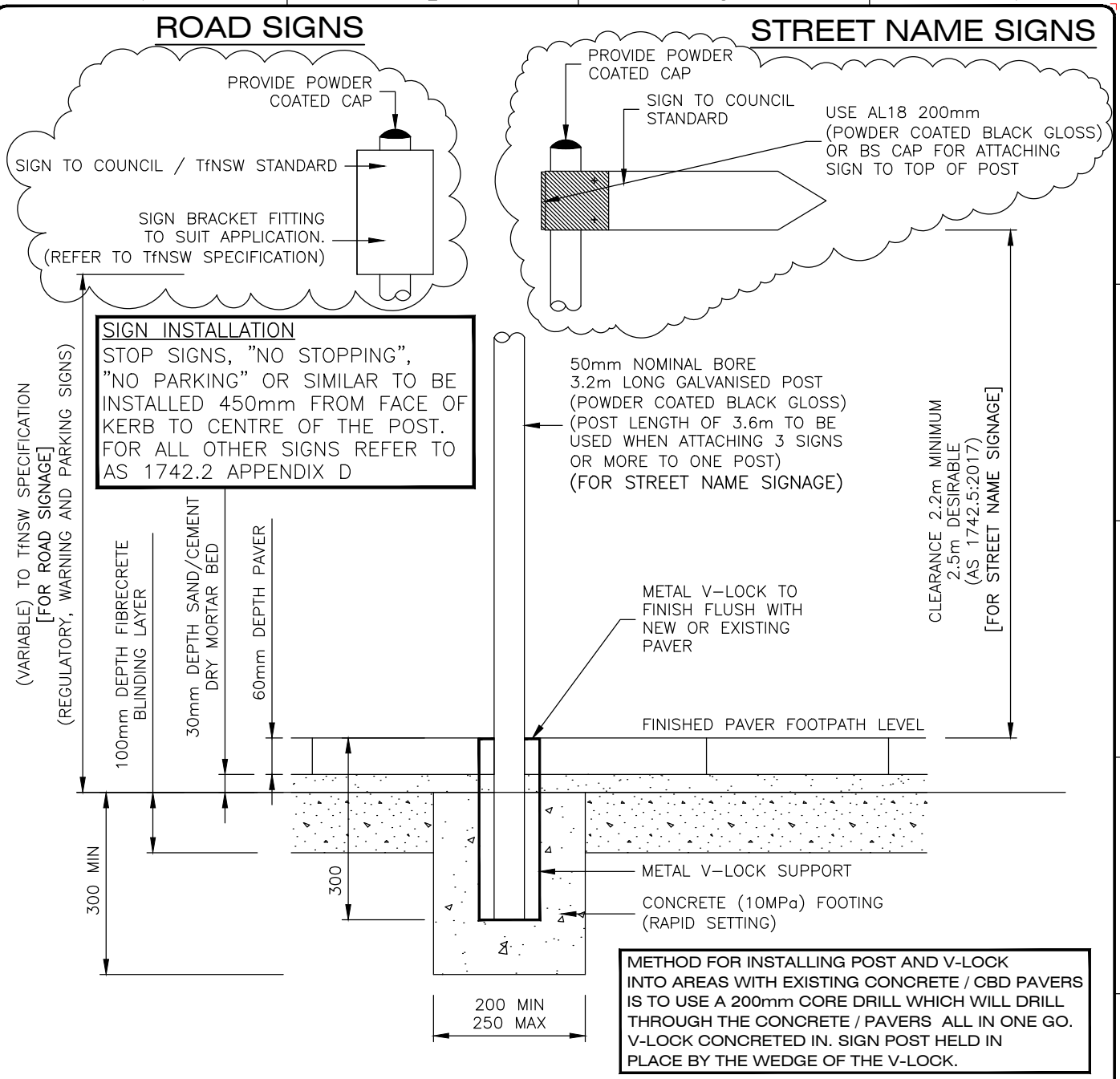

SIGN POST SUPPORT

SCALE 1:10

NOTES

1. A HOLE 300mm DEEP IS DUG AND A 300mm LONG V-LOCK INSERTED AND CONCRETED IN. CONCRETE TO BE 10MPa. THE POST IS INSERTED INTO THE V-LOCK AND IS HELD IN PLACE BY THE WEDGE OF THE V-LOCK. IT IS PREFERABLE FOR THE CONCRETE TO BE ALLOWED TO SET BEFORE THE SIGN IS FASTENED TO THE POST.
2. WHERE A V-LOCK CANNOT BE USED APPROVAL FOR ALTERNATE METHODS TO BE OBTAINED FROM SUPERINTENDENT OR PROJECT MANAGER.
3. ALL DIMENSIONS ARE IN MILLIMETRES UNLESS OTHERWISE SHOWN.
4. CHECK WITH DBYD PLANS (DIAL1100) BEFORE EXCAVATING POST HOLE.

200 100 0 200 400 600 800 1000

SCALE OF MILLIMETRES 1:10

DESIGNED / DRAWN Date:	Scale: AS SHOWN	FINAL	CITY OF PARRAMATTA COUNCIL	PLAN N°
DESIGN CHECKED & APPROVED Date:	ASSET OWNER Date:		SIGN POST SUPPORT CBD IN PAVERS	DS11A
MANAGER CAPITAL PROJECTS Date:	GROUP MANAGER CITY ASSETS & ENVIRONMENT Date:		SECTION DETAIL AND NOTES	Sheet No : 1 of 1 Revision :

ROAD SIGNS

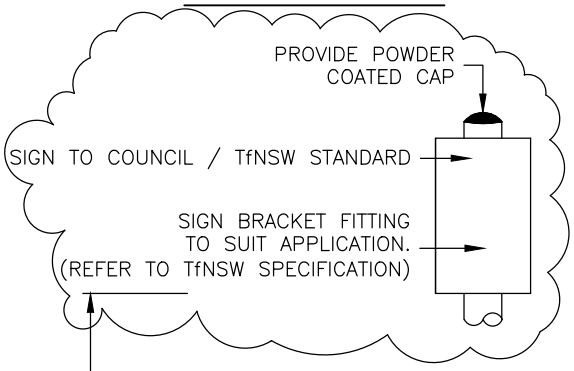

STREET NAME SIGNS

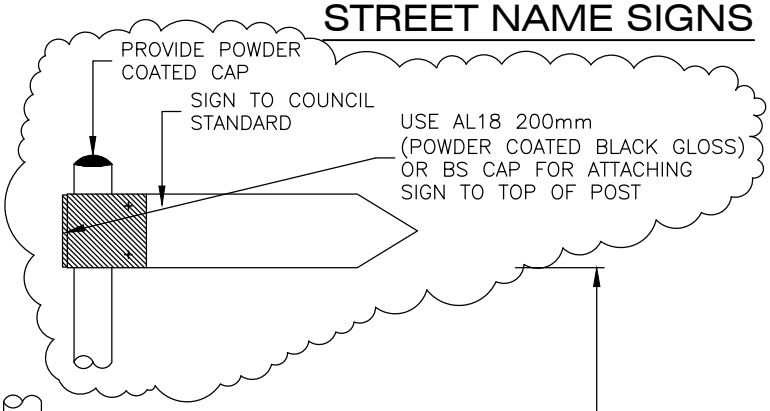

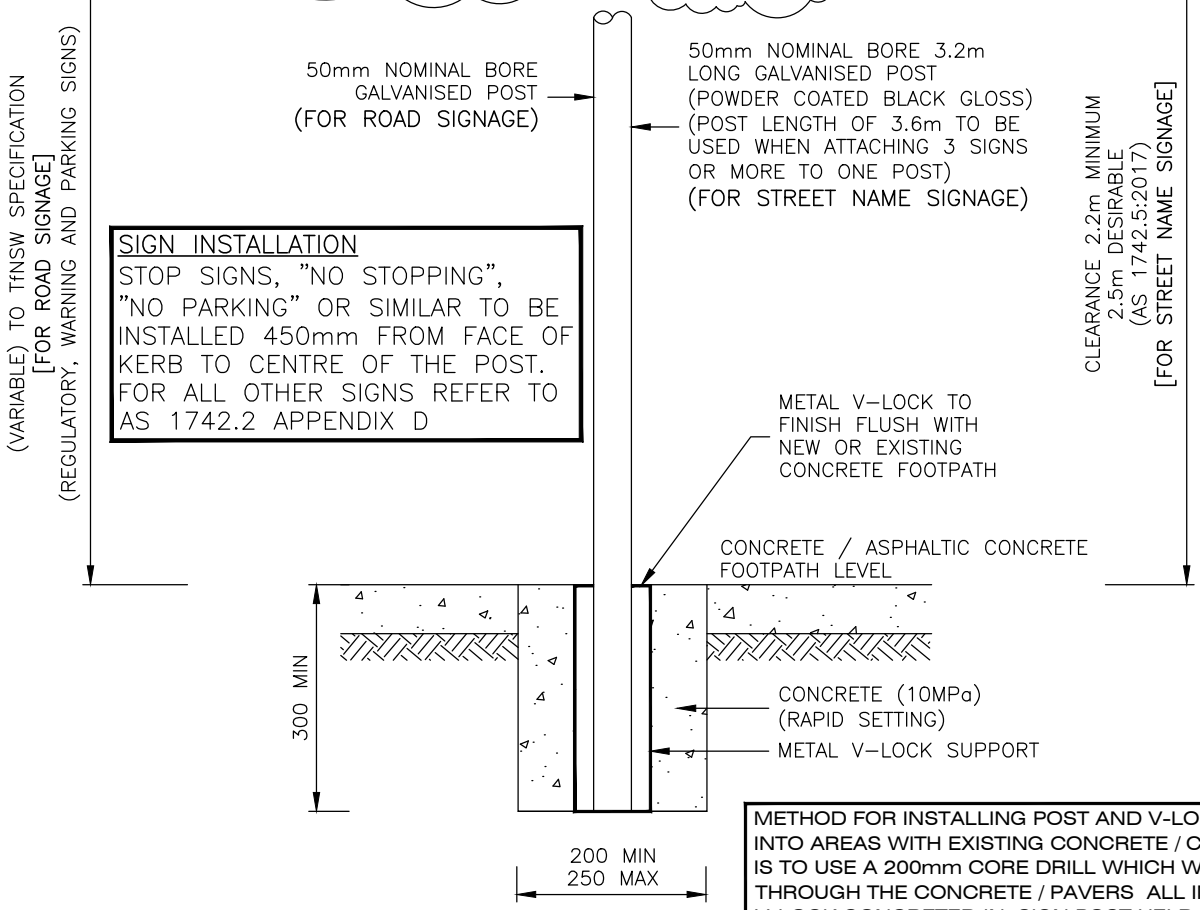

SIGN INSTALLATION

STOP SIGNS, "NO STOPPING", "NO PARKING" OR SIMILAR TO BE INSTALLED 450mm FROM FACE OF KERB TO CENTRE OF THE POST. FOR ALL OTHER SIGNS REFER TO AS 1742.2 APPENDIX D

METHOD FOR INSTALLING POST AND V-LOCK INTO AREAS WITH EXISTING CONCRETE / CBD PAVERS IS TO USE A 200mm CORE DRILL WHICH WILL DRILL THROUGH THE CONCRETE / PAVERS ALL IN ONE GO. V-LOCK CONCRETED IN. SIGN POST HELD IN PLACE BY THE WEDGE OF THE V-LOCK.

SIGN POST SUPPORT

SCALE 1:10

NOTES

1. A HOLE 300mm DEEP IS DUG AND A 300mm LONG V-LOCK INSERTED AND CONCRETED IN. CONCRETE IS TO BE 10MPa. THE POST IS INSERTED INTO THE V-LOCK AND IS HELD IN PLACE BY THE WEDGE OF THE V-LOCK. IT IS PREFERABLE FOR THE CONCRETE TO BE ALLOWED TO SET BEFORE THE SIGN IS FASTENED TO THE POST.
2. WHERE A V-LOCK CANNOT BE USED APPROVAL FOR ALTERNATE METHODS TO BE OBTAINED FROM SUPERINTENDENT OR PROJECT MANAGER.
3. ALL DIMENSIONS ARE IN MILLIMETRES UNLESS OTHERWISE SHOWN.
4. CHECK WITH DBYD PLANS (DIAL 1100) BEFORE EXCAVATING POST HOLE.

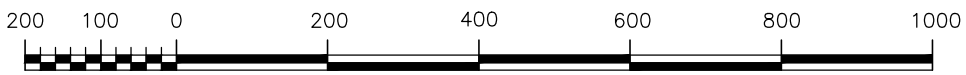

SCALE OF MILLIMETRES 1:10

DESIGNED / DRAWN Date:	Scale: AS SHOWN	FINAL	CITY OF PARRAMATTA COUNCIL	PLAN N°
DESIGN CHECKED & APPROVED Date:	ASSET OWNER Date:		SIGN POST SUPPORT	DS11B
MANAGER CAPITAL PROJECTS Date:	GROUP MANAGER CITY ASSETS & ENVIRONMENT Date:		SECTION DETAIL AND NOTES	Sheet No : 1 of 1 Revision :

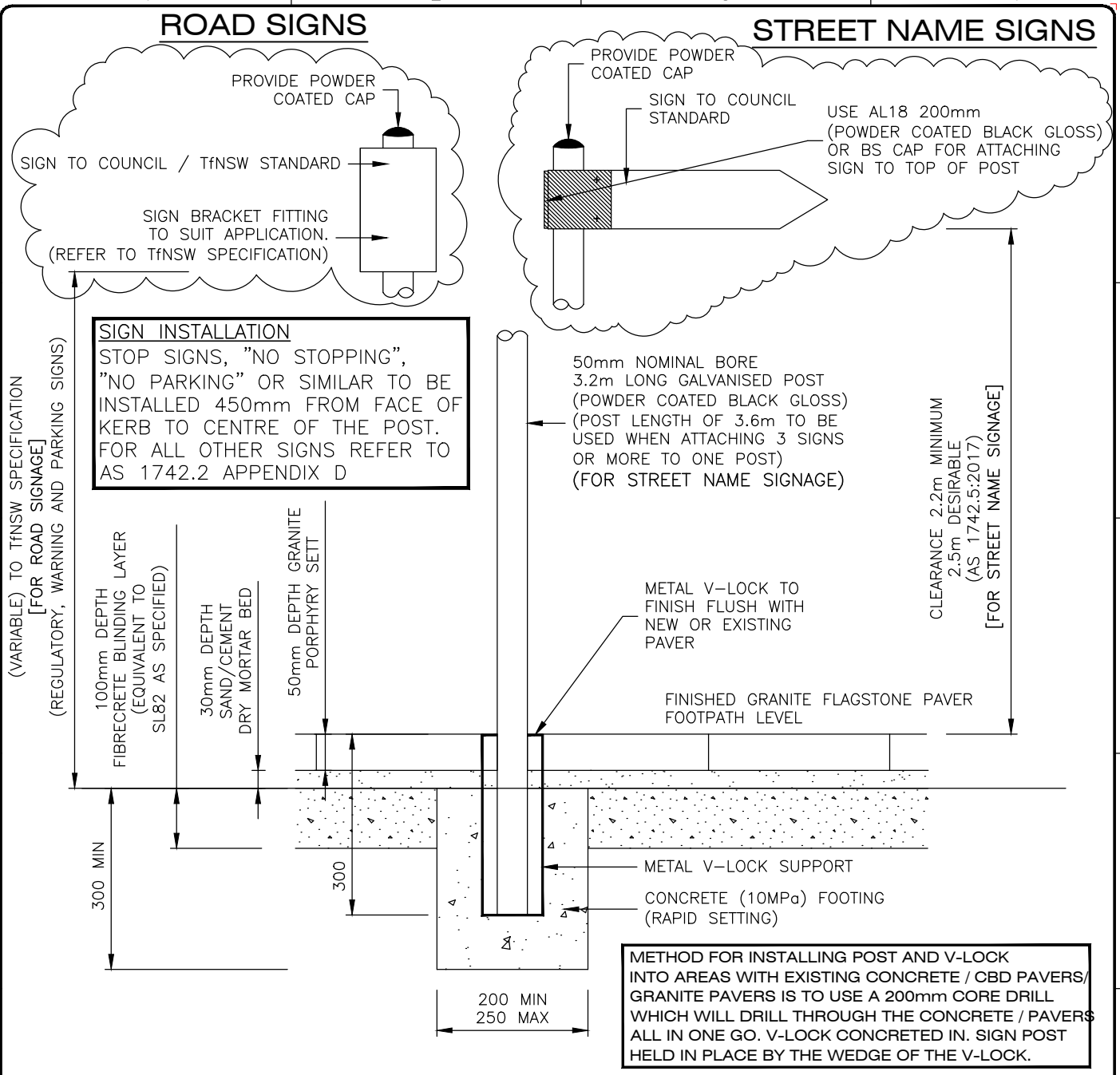

SIGN POST SUPPORT

SCALE 1:10

NOTES

1. A HOLE 300mm DEEP IS DUG AND A 300mm LONG V-LOCK INSERTED AND CONCRETED IN. CONCRETE TO BE 10MPa. THE POST IS INSERTED INTO THE V-LOCK AND IS HELD IN PLACE BY THE WEDGE OF THE V-LOCK. IT IS PREFERABLE FOR THE CONCRETE TO BE ALLOWED TO SET BEFORE THE SIGN IS FASTENED TO THE POST.
2. WHERE A V-LOCK CANNOT BE USED APPROVAL FOR ALTERNATE METHODS TO BE OBTAINED FROM SUPERINTENDENT OR PROJECT MANAGER.
3. ALL DIMENSIONS ARE IN MILLIMETRES UNLESS OTHERWISE SHOWN.
4. CHECK WITH DBYD PLANS (DIAL1100) BEFORE EXCAVATING POST HOLE.

200 100 0 200 400 600 800 1000

SCALE OF MILLIMETRES 1:10

DESIGNED / DRAWN Date:	Scale: AS SHOWN FINAL	CITY OF PARRAMATTA COUNCIL	PLAN N°
DESIGN CHECKED & APPROVED Date:	ASSET OWNER Date:	SIGN POST SUPPORT IN GRANITE PORPHYRY SETTS	DS11C
MANAGER CAPITAL PROJECTS Date:	GROUP MANAGER CITY ASSETS & ENVIRONMENT Date:	SECTION DETAIL AND NOTES	Sheet No : 1 of 1 Revision :

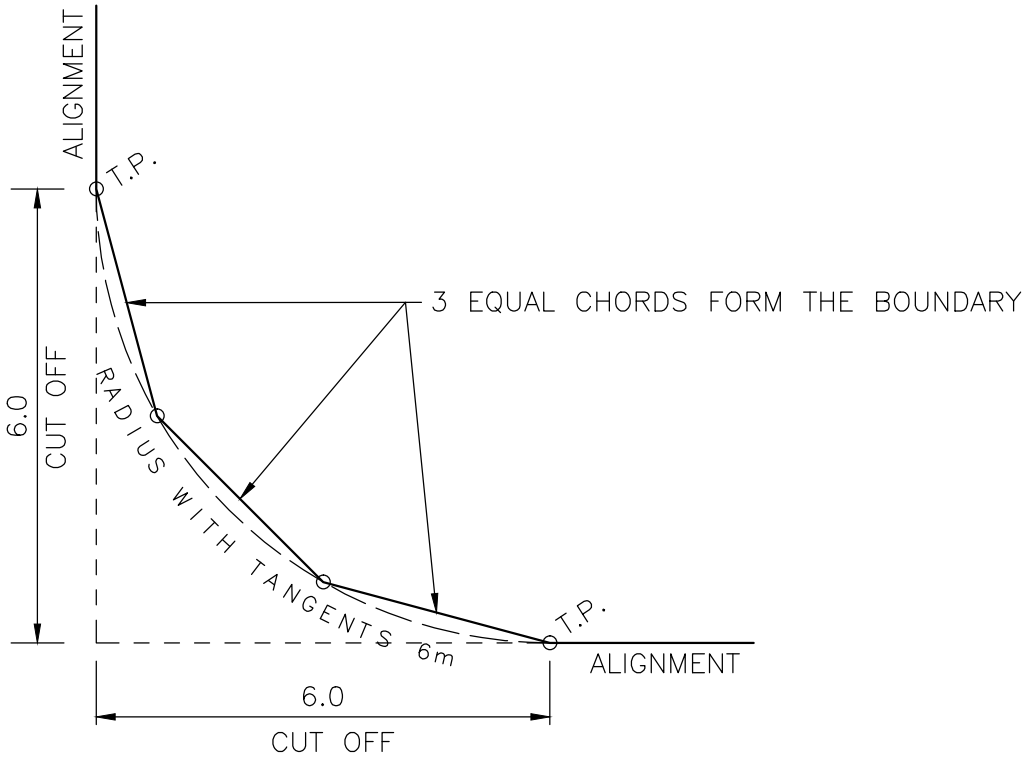

INTERSECTION OF TWO STREETS

SCALE 1:100

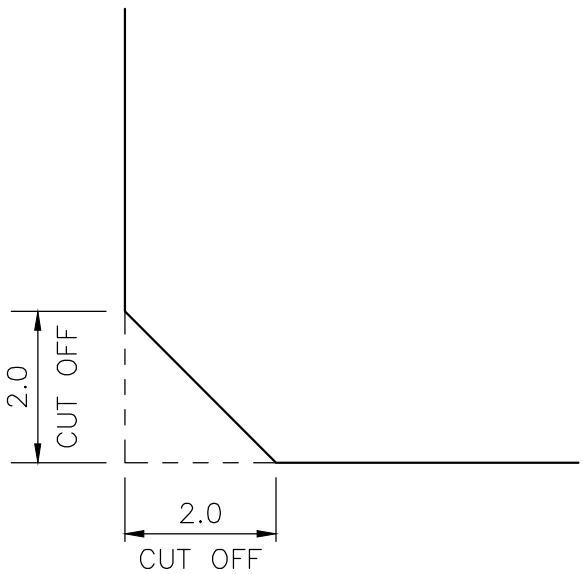

INTERSECTION OF TWO LANEWAYS OR LANEWAY WITH STREET

SCALE 1:100

NOTES

1. CUT OFF DISTANCE IS CONSTANT IRRESPECTIVE OF ANGLE BETWEEN ALIGNMENTS.
2. DIMENSIONS ARE IN METRES UNLESS OTHERWISE SHOWN.

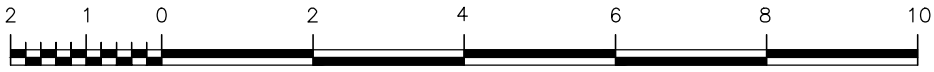

SCALE OF METRES 1:100

DESIGNED / DRAWN Date:	Scale: AS SHOWN **FINAL**	**CITY OF PARRAMATTA COUNCIL**	PLAN N°
DESIGN CHECKED & APPROVED Date:	ASSET OWNER Date:	CORNER ROUNDING AT PROPERTY BOUNDARY	DS12
MANAGER CAPITAL PROJECTS Date:	GROUP MANAGER CITY ASSETS & ENVIRONMENT Date:	PLAN VIEWS AND NOTES	Sheet No : 1 of 1
			Revision :

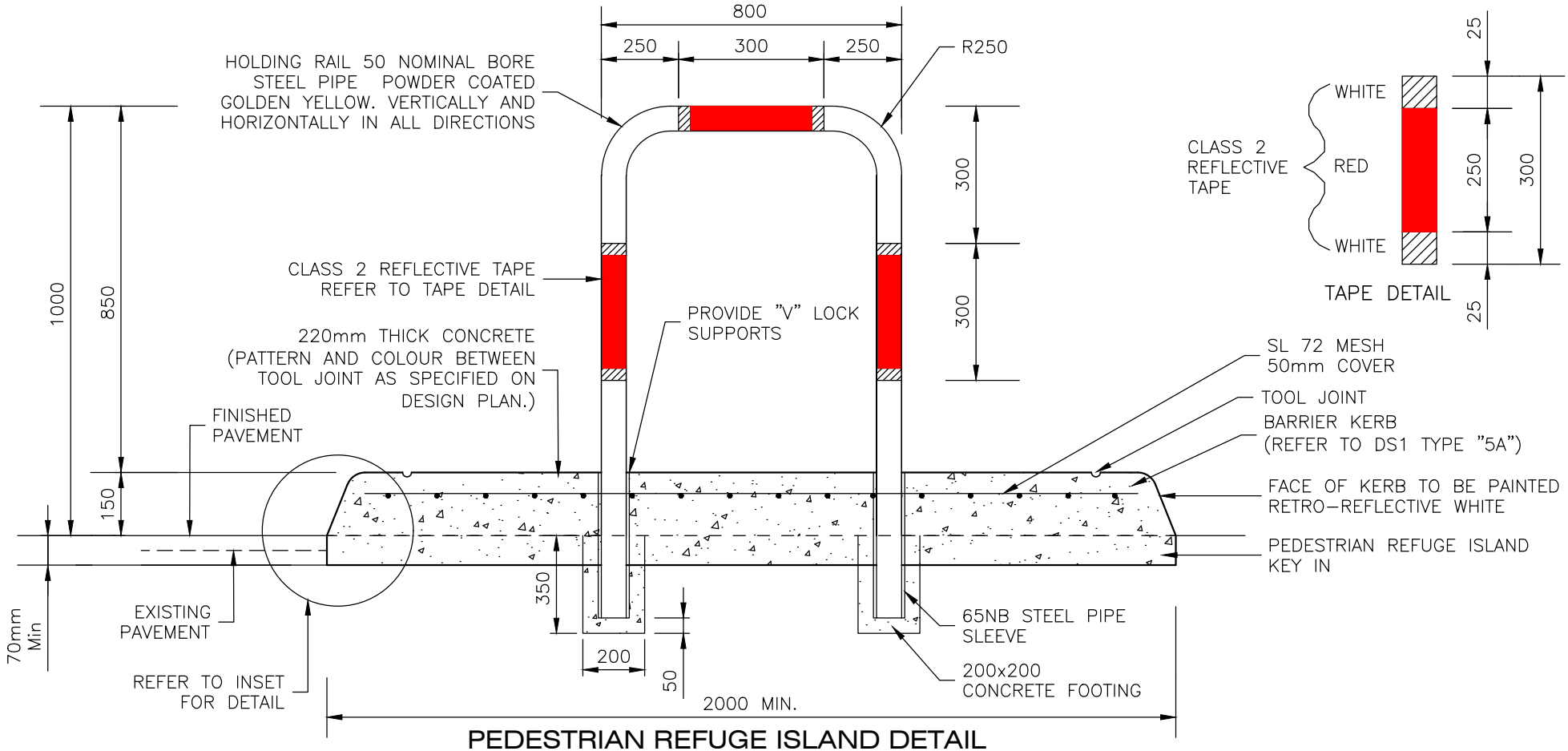

PEDESTRIAN REFUGE ISLAND DETAIL

N.T.S.

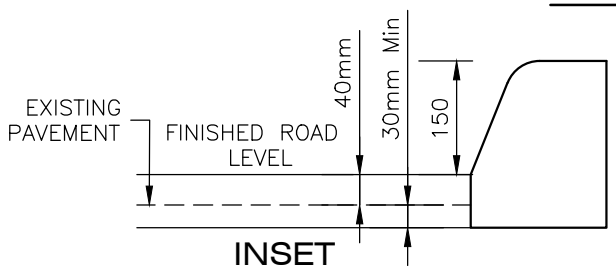

INSET

N.T.S. (mm)

NOTES

1. CURVED MEMBERS TO BE BENT TO RADII SHOWN.
2. KEEP LEFT SIGN MUST BE USED IN CONJUNCTION WITH HOLDING RAIL.
3. OFFSET HOLDING RAIL 0.3m FROM PEDESTRIAN GAP.
4. BASED ON TfNSW TECHNICAL DIRECTION TDT 2011/01a AND AS 1742.10-2009
5. CONCRETE IS TO BE N32 IN ACCORDANCE WITH AS 1379-2007 (R2017) AND AS 3600:2018
6. ALL DIMENSIONS IN MILLIMETRES UNLESS OTHERWISE SHOWN.

AMENDMENTS			
No.	DETAIL	DATE	CHECKED

DESIGNED / DRAWN Date:

DESIGN CHECKED & APPROVED Date:

MANAGER CAPITAL PROJECTS Date:

Scale: AS SHOWN **FINAL**

ASSET OWNER Date:

GROUP MANAGER CITY ASSETS & ENVIRONMENT Date:

CITY OF PARRAMATTA COUNCIL

PEDESTRIAN REFUGE ISLAND DETAIL (KEY IN)

DETAILS AND NOTES

PLAN N° DS13A

Sheet No : 1 of 1

Revision :

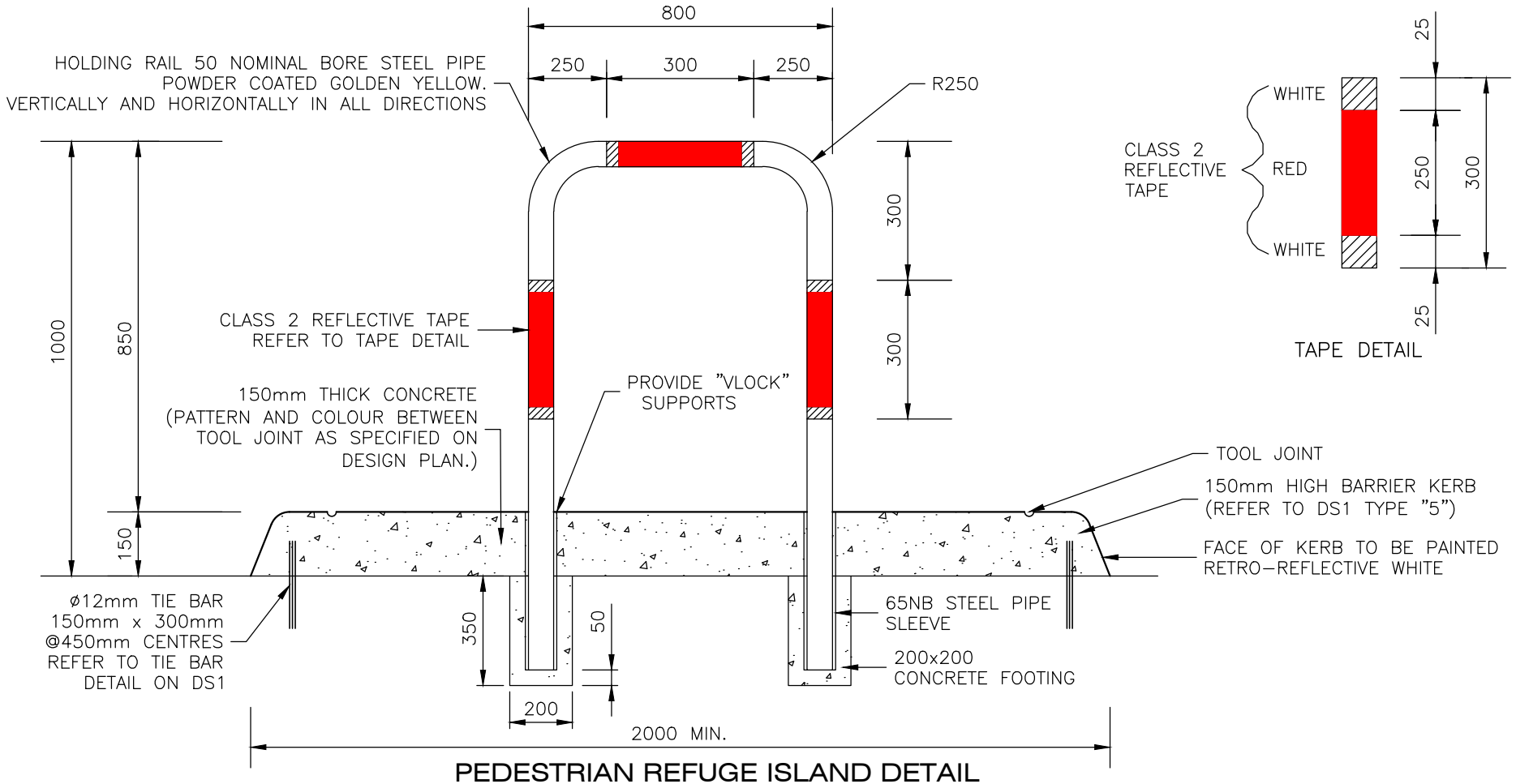

PEDESTRIAN REFUGE ISLAND DETAIL

N.T.S.

NOTES

1. CURVED MEMBERS TO BE BENT TO RADII SHOWN.
2. KEEP LEFT SIGN MUST BE USED IN CONJUNCTION WITH HOLDING RAIL.
3. OFFSET HOLDING RAIL 0.3m FROM PEDESTRIAN GAP.
4. BASED ON RMS TECHNICAL DIRECTION TDT 2011/01a AND AS 1742.10-2009
5. CONCRETE IS TO BE N32 IN ACCORDANCE WITH AS 1379-2007 (R2017) AND AS 3600:2018
6. ALL DIMENSIONS IN MILLIMETRES UNLESS OTHERWISE SHOWN.

USE ONLY IN SPECIAL SITUATIONS BY APPROVAL OF COUNCIL'S SUPERVISING OFFICER

AMENDMENTS			
No.	DETAIL	DATE	CHECKED

DESIGNED / DRAWN Date:

DESIGN CHECKED & APPROVED Date:

MANAGER CAPITAL PROJECTS Date:

Scale: AS SHOWN **FINAL**

ASSET OWNER Date:

GROUP MANAGER CITY ASSETS & ENVIRONMENT Date:

CITY OF PARRAMATTA COUNCIL

PEDESTRIAN REFUGE ISLAND DETAIL (TIE IN)

DETAILS AND NOTES

PLAN N° DS13B

Sheet No : 1 of 1

Revision :

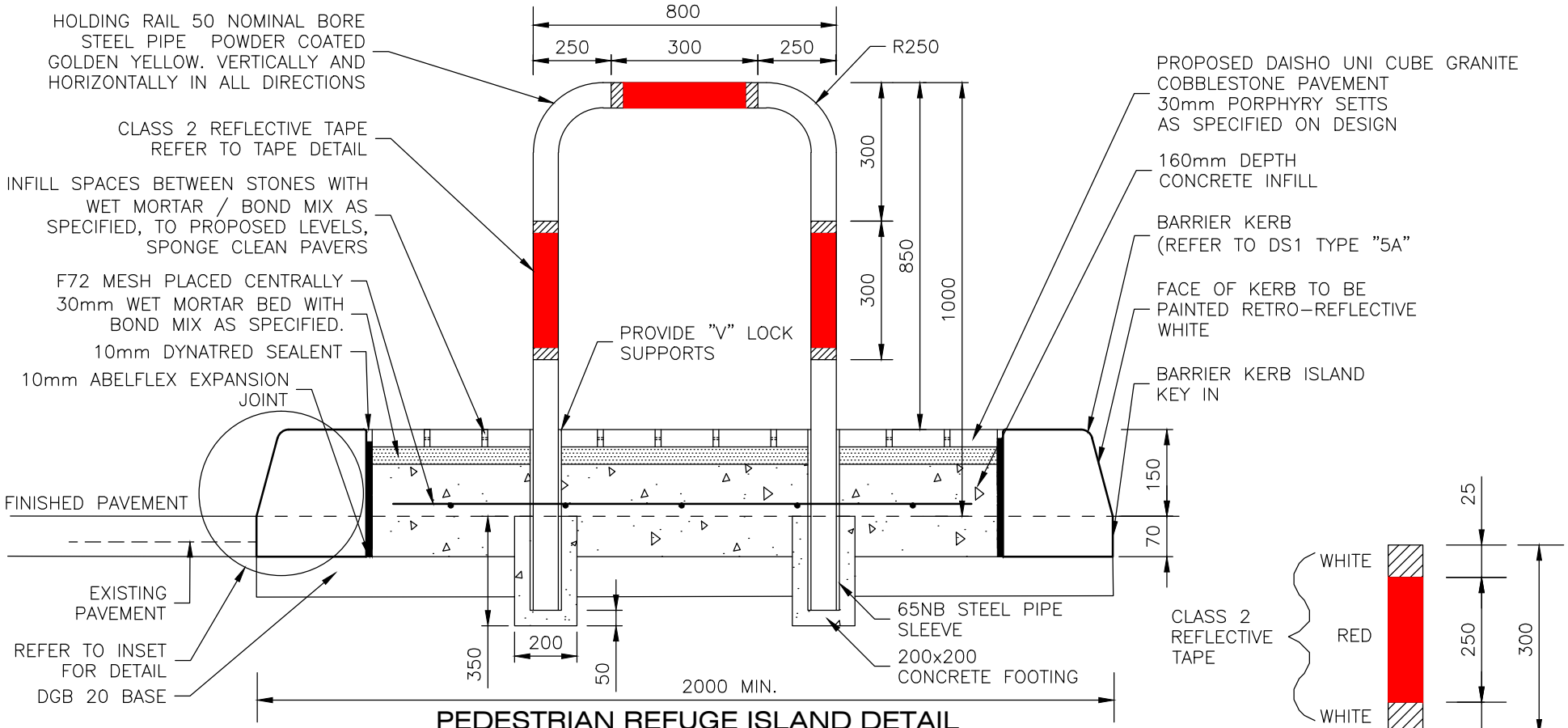

PEDESTRIAN REFUGE ISLAND DETAIL WITH PORPHYRY SETTS

N.T.S.

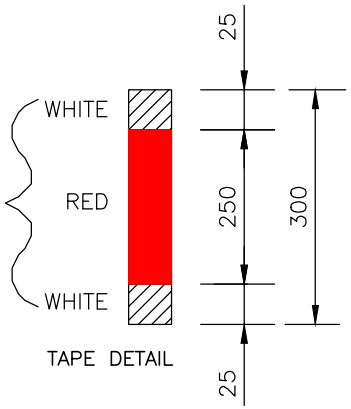

TAPE DETAIL

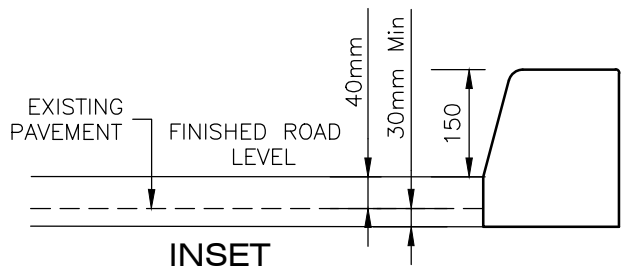

INSET

N.T.S. (mm)

NOTES

1. CURVED MEMBERS TO BE BENT TO RADII SHOWN.
2. KEEP LEFT SIGN MUST BE USED IN CONJUNCTION WITH HOLDING RAIL.
3. OFFSET HOLDING RAIL 0.3m FROM PEDESTRIAN GAP.
4. BASED ON RMS TECHNICAL DIRECTION TDT 2011/01a AND AS 1742.10-2009
5. CONCRETE IS TO BE N32 IN ACCORDANCE WITH AS 1379-2007 (R2017) AND AS 3600:2018
6. ALL DIMENSIONS IN MILLIMETRES UNLESS OTHERWISE SHOWN.

AMENDMENTS			
No.	DETAIL	DATE	CHECKED

DESIGNED / DRAWN Date:

DESIGN CHECKED & APPROVED Date:

MANAGER CAPITAL PROJECTS Date:

Scale: AS SHOWN **FINAL**

ASSET OWNER Date:

GROUP MANAGER CITY ASSETS & ENVIRONMENT Date:

CITY OF PARRAMATTA COUNCIL

PEDESTRIAN REFUGE ISLAND DETAIL WITH PORPHYRY SETTS (KEY IN)

DETAILS AND NOTES

PLAN N° DS13C

Sheet No : 1 of 1

Revision :

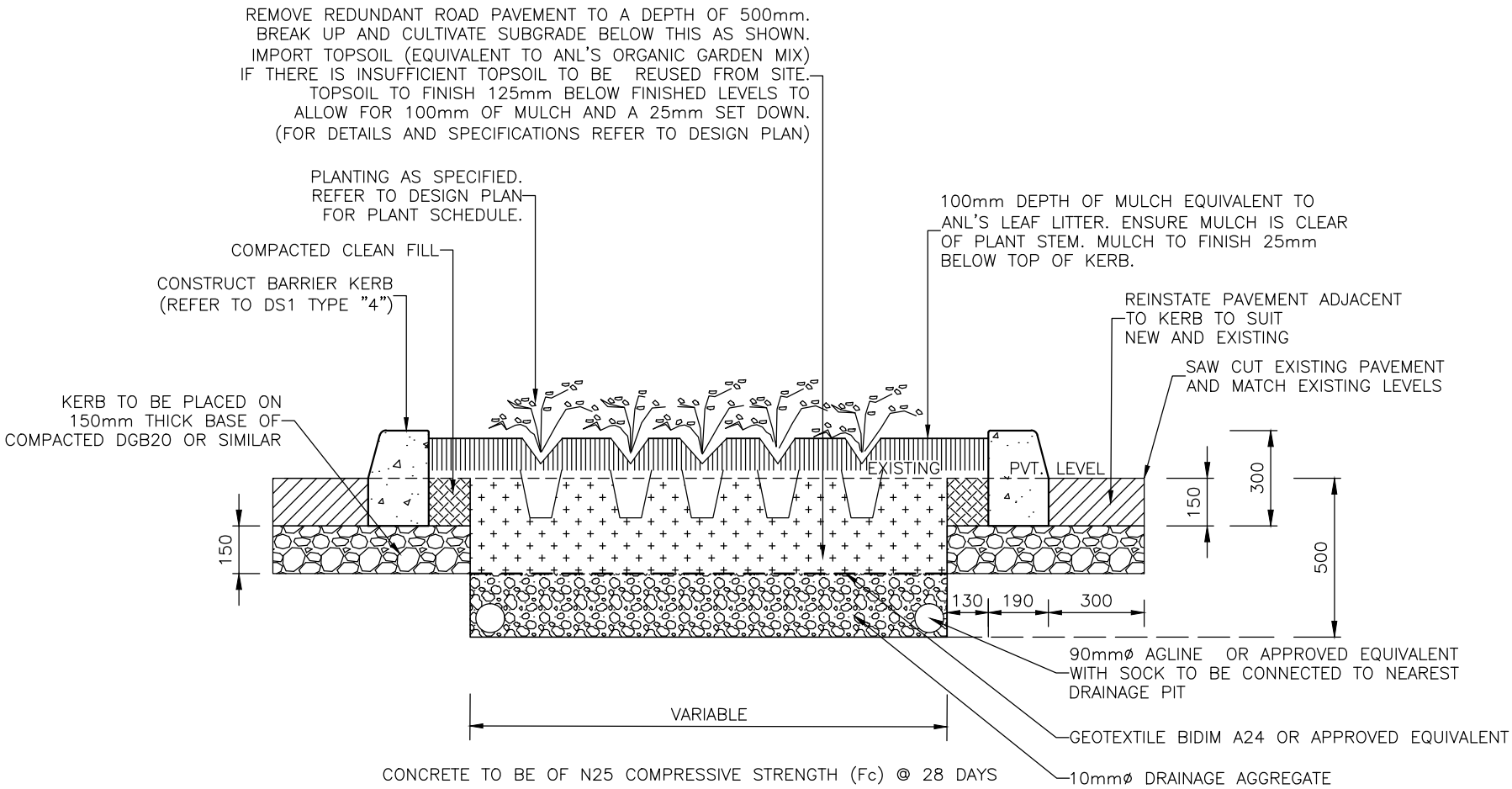

CONCRETE TO BE OF N25 COMPRESSIVE STRENGTH (Fc) @ 28 DAYS

LANDSCAPED BARRIER KERB ISLAND DETAIL

NOTE

1. CONCRETE IS TO BE N25 IN ACCORDANCE WITH AS 1379–2007 (R2017) AND AS 3600:2018
2. ROAD BASE MATERIAL IS TO BE DGB20 OR SIMILAR AND COMPACTED TO 100% STANDARD MAXIMUM DRY DENSITY IN ACCORDANCE WITH AS 1289.5.1.1:2017
3. ALL DIMENSIONS ARE IN MILLIMETRES UNLESS SHOWN OTHERWISE.

AMENDMENTS			
No.	DETAIL	DATE	CHECKED

DESIGNED / DRAWN Date:

DESIGN CHECKED & APPROVED Date:

MANAGER CAPITAL PROJECTS Date:

Scale: N.T.S. **FINAL**

ASSET OWNER Date:

GROUP MANAGER CITY ASSETS & ENVIRONMENT Date:

CITY OF PARRAMATTA COUNCIL

LANDSCAPED BARRIER KERB ISLAND

SECTION DETAIL AND NOTE

PLAN N° DS14

Sheet No : 1 of 1

Revision :

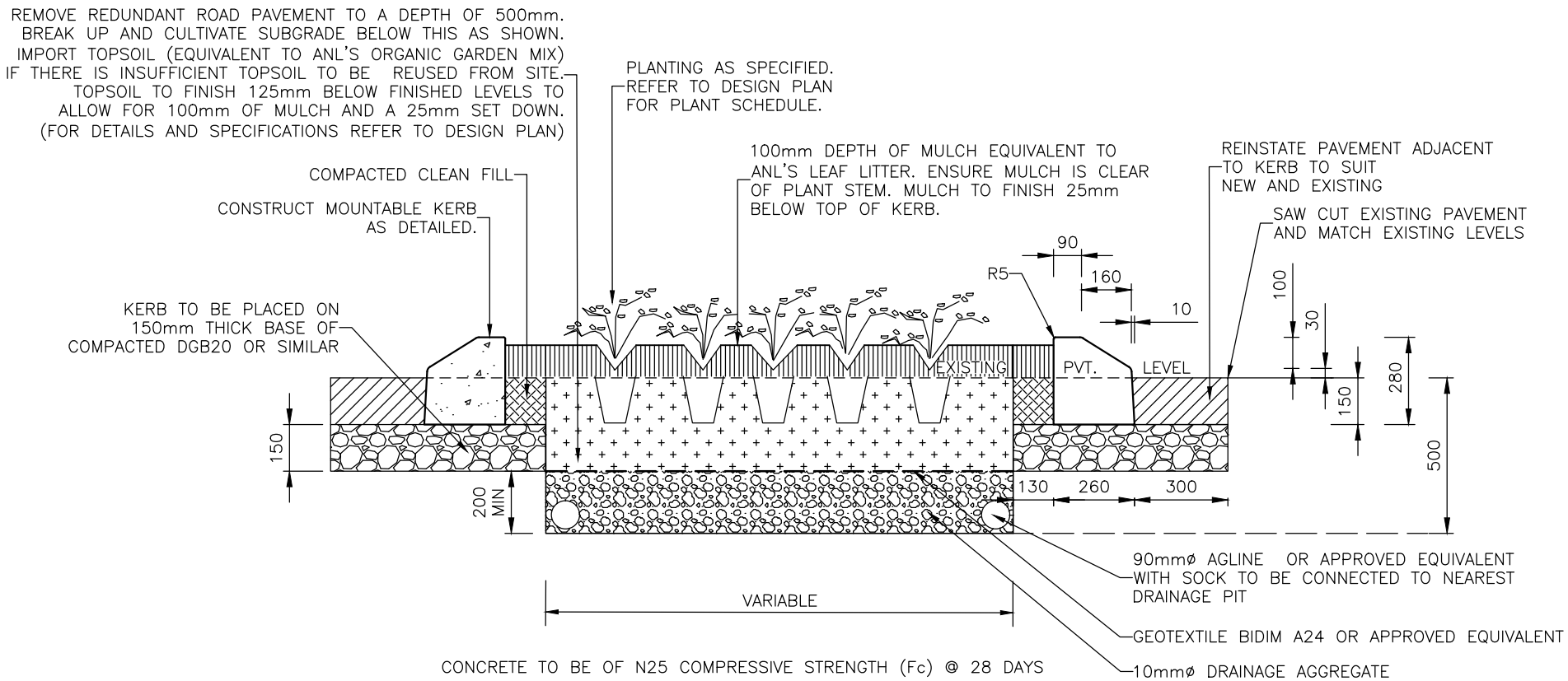

LANDSCAPED MOUNTABLE KERB ISLAND DETAIL

NOTE

1. CONCRETE IS TO BE N25 IN ACCORDANCE WITH AS 1379–2007 (R2017) AND AS 3600:2018
2. ROAD BASE MATERIAL IS TO BE DGB20 OR SIMILAR AND COMPACTED TO 100% STANDARD MAXIMUM DRY DENSITY IN ACCORDANCE WITH AS 1289.5.1.1:2017
3. ALL CHAMFER / FILLETS ARE RADIUS 20 UNLESS SHOWN OTHERWISE.
4. ALL DIMENSIONS ARE IN MILLIMETRES UNLESS SHOWN OTHERWISE.

AMENDMENTS			
No.	DETAIL	DATE	CHECKED

DESIGNED / DRAWN Date:
DESIGN CHECKED & APPROVED Date:
MANAGER CAPITAL PROJECTS Date:

Scale: N.T.S. **FINAL**
ASSET OWNER Date:
GROUP MANAGER CITY ASSETS & ENVIRONMENT Date:

CITY OF PARRAMATTA COUNCIL

LANDSCAPED
MOUNTABLE KERB ISLAND

SECTION DETAIL AND NOTES

PLAN N° DS15
Sheet No : 1 of 1
Revision :

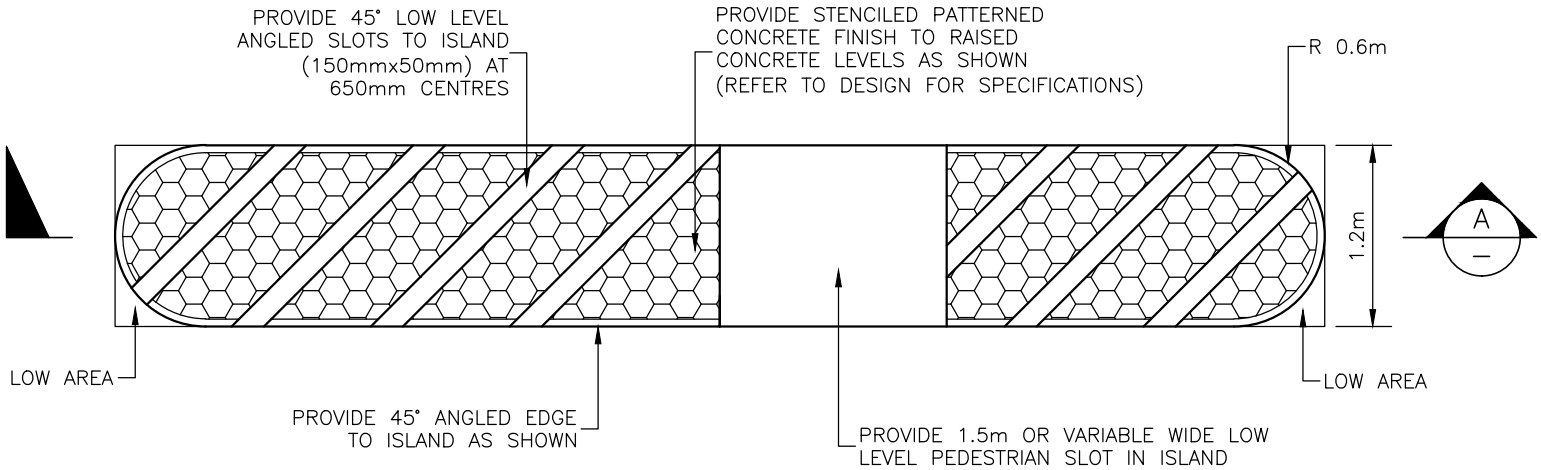

PLAN

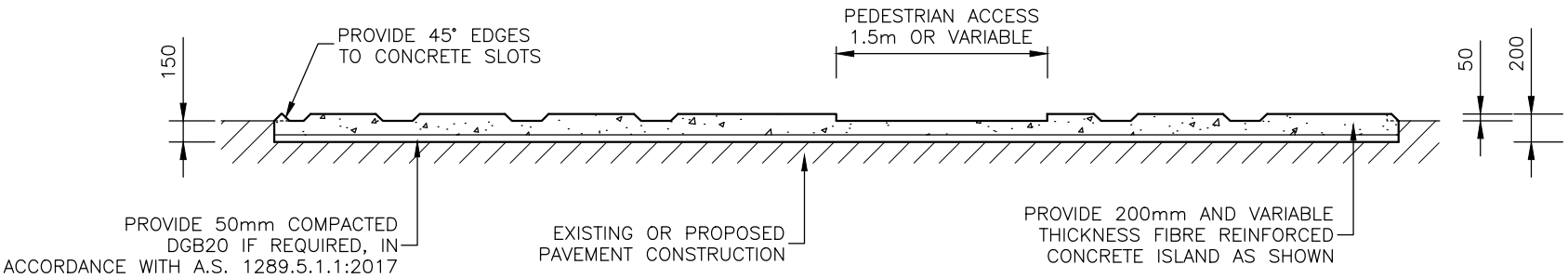

SECTION "A-A"
ENTRY THRESHOLD DETAIL

NOTES

1. FIBRE REINFORCED CONCRETE SHALL BE GRADE F6/75
   (6MPa 90 DAY FLEXURAL STRENGTH USING 75Kg/cu.m OF FIBRE STEEL TYPE EE STEEL FIBRES)
2. ALL DIMENSIONS ARE IN MILLIMETRES UNLESS OTHERWISE SHOWN.

AMENDMENTS			
No.	DETAIL	DATE	CHECKED

DESIGNED / DRAWN Date:
DESIGN CHECKED & APPROVED Date:
MANAGER CAPITAL PROJECTS Date:

Scale: N.T.S. **FINAL**
ASSET OWNER Date:
GROUP MANAGER CITY ASSETS & ENVIRONMENT Date:

CITY OF PARRAMATTA COUNCIL

ENTRY THRESHOLD TREATMENT

PLAN, SECTION "A–A" AND NOTES

PLAN N° DS16
Sheet No : 1 of 1
Revision :

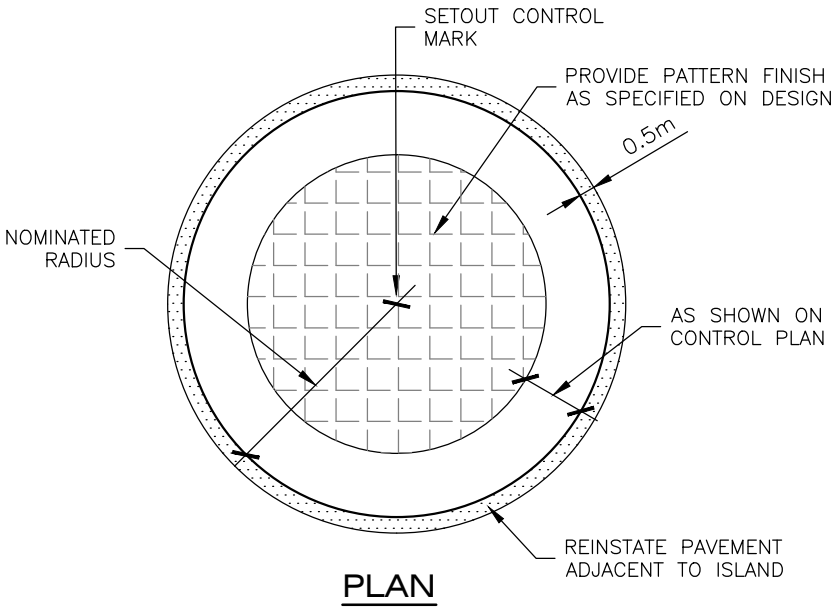

PLAN

CONSTRUCTION NOTES

1. BOX OUT CENTRE ISLAND AS SHOWN. REMOVE AND REPLACE UNSOUND SUBGRADE IF REQUIRED.
2. PROVIDE MINIMUM 150mm D.G.B.20 BASE TO ANNULUS SHAPE AND COMPACT TO 100% STANDARD MAXIMUM DRY DENSITY IN ACCORDANCE WITH A.S. 1289.5.1.1:2017
3. IF A RESHEET >30mm IS REQUIRED OVER INTERSECTION, CENTRE ISLAND IS TO BE RAISED TO MAINTAIN 50mm LIP AS SHOWN. (REFER TO ANNULUS DETAIL)
4. COMMENCE CONSTRUCTION AT ANNULUS AND WORK TOWARDS CENTRE.
5. CONCRETE TO BE N32 AND SLUMP OF 80mm IN ACCORDANCE WITH AS 1379–2007 (R2017) AND AS 3600:2018.
6. ISLAND TO BE LOCATED USING CENTRE CONTROL MARK PROVIDED.
7. INTERSECTION TO BE TRAFFIC MANAGED AS A ROUNDABOUT THROUGHOUT CONSTRUCTION.
8. MESH TO HAVE MINIMUM 300mm LAP LENGTH.
9. GRADIENT TO BE CONTROLLED BY EXISTING OR PROPOSED PAVEMENT. (REFER DATUM LINE)
10. ISLAND MAY BE POURED IN TWO PARTS DEPENDING ON SIZE.
11. PROVIDE 30mmx10mm MASTIC JOINT TO TOP HALF OF SLAB. MESH TO CONTINUE THROUGH JOINT, IF CONSTRUCTED IN TWO PARTS.
12. WHERE SEMITRAILER OR LARGER ARTICULATED VEHICLE MOVEMENT EXPECTED, ANNULUS GRADIENT SHALL BE NO STEEPER THAN 1:40 (PREFERRED 1:50)
13. ALL DIMENSIONS ARE IN MILLIMETRES UNLESS OTHERWISE SHOWN.

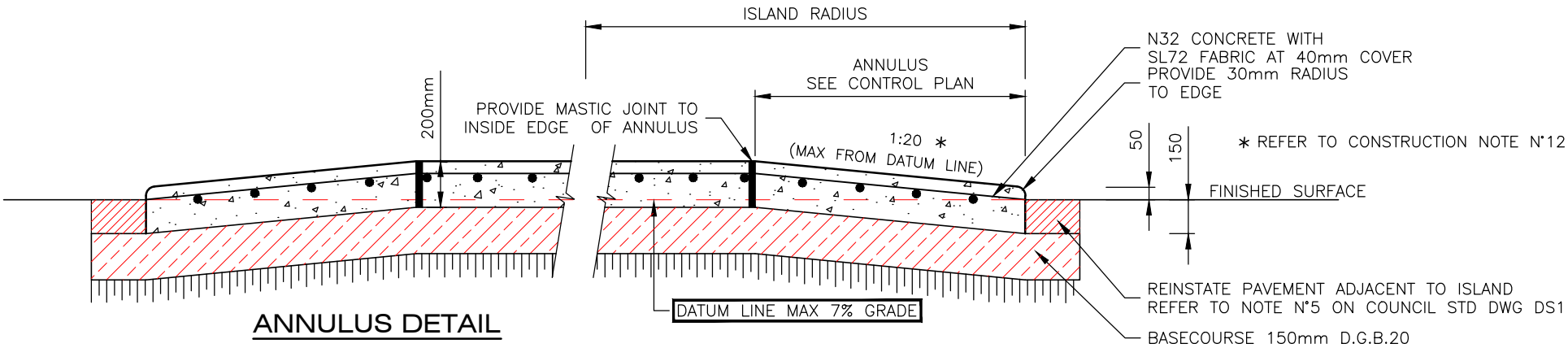

ANNULUS DETAIL

AMENDMENTS			
No.	DETAIL	DATE	CHECKED

DESIGNED / DRAWN Date:
DESIGN CHECKED & APPROVED Date:
MANAGER CAPITAL PROJECTS Date:

Scale: N.T.S. **FINAL**
ASSET OWNER Date:
GROUP MANAGER CITY ASSETS & ENVIRONMENT Date:

CITY OF PARRAMATTA COUNCIL

ROUNDABOUT
CENTRE ISLAND AND ANNULUS DETAIL

PLAN, DETAIL AND CONSTRUCTION NOTES

PLAN N° DS17
Sheet No : 1
Revision :

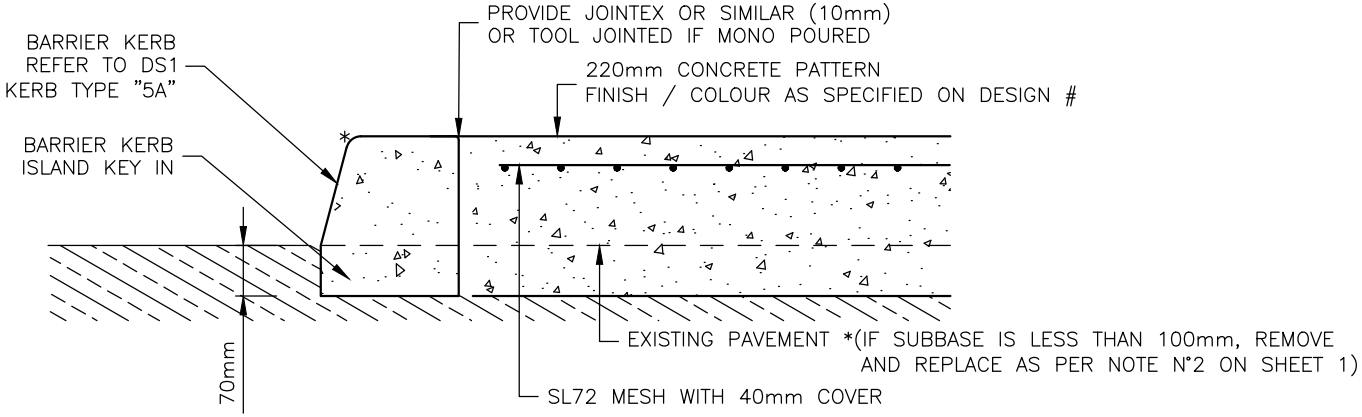

CONCRETE TO BE N32 IN ACCORDANCE WITH AS 1379–2007 (R2017) AND AS 3600:2018

* ALL BARRIER KERB SHARP EDGES TO CHAMFER / FILLET WITH R20

SPLITTER ISLAND DETAIL X-X

NOTES

1. ALL PAVEMENT MARKING AND SIGN POSTING TO BE IN ACCORDANCE WITH ROADS AND MARITIME SERVICES SUPPLEMENTS, RMS DELINEATION MANUAL, AUSTROADS GUIDES, AUSTRALIAN STANDARDS (AS 1742) AND RMS SPECIFICATIONS R141 AND R143
2. ALL RETROREFLECTIVE RAISED PAVEMENT MARKERS TO BE IN ACCORDANCE WITH RMS SPECIFICATION R142 AND RMS "DELINEATION" SECTION 15 – RAISED PAVEMENT MARKERS
3. PROVIDE "KEEP LEFT" SIGNS "R2–3L" OR "R2–3AAL" ON IMPACT RECOVERY POSTS AS SHOWN ON TRAFFIC MANAGEMENT PLAN.
4. ALL CONCRETE ISLAND KERB FACES TO BE PAINTED WITH APPROVED REFLECTIVE WHITE PAINT IN ACCORDANCE WITH RMS SPECIFICATION R141
5. LONGITUDINAL LINEMARKING TO BE PAINT AND ALL TRANSVERSE LINEMARKING TO BE THERMOPLASTIC UNLESS STATED OTHERWISE.

B.B.....DOUBLE WHITE BARRIER LINE
E.4.....200mm WIDE CONTINUOUS WHITE LINE
T.B.....HOLDING LINE
.....BI–DIRECTIONAL YELLOW REFLECTORISED PAVEMENT MARKER (TYPE "YY")
.....MONO DIRECTIONAL YELLOW REFLECTORISED PAVEMENT MARKER (TYPE "Y")
.....MONO DIRECTIONAL RED REFLECTORISED PAVEMENT MARKER (TYPE "R")

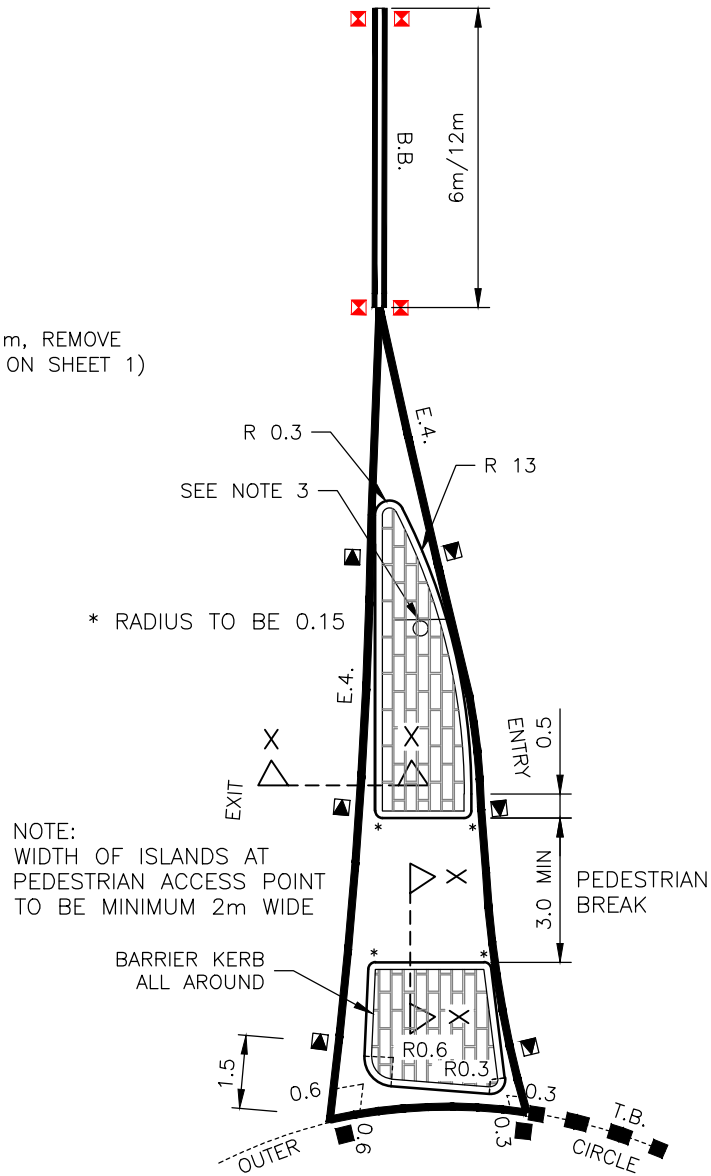

SPLITTER ISLAND DETAIL

AMENDMENTS			
No.	DETAIL	DATE	CHECKED

DESIGNED / DRAWN Date:
DESIGN CHECKED & APPROVED Date:
MANAGER CAPITAL PROJECTS Date:

Scale: N.T.S. **FINAL**

ASSET OWNER Date:
GROUP MANAGER CITY ASSETS & ENVIRONMENT Date:

CITY OF PARRAMATTA COUNCIL

ROUNDABOUT
BARRIER KERB SPLITTER ISLAND DETAIL
WITH MIN 3.0m PEDESTRIAN BREAK

DETAILS AND NOTES

PLAN N° DS17
Sheet No : 2
Revision :

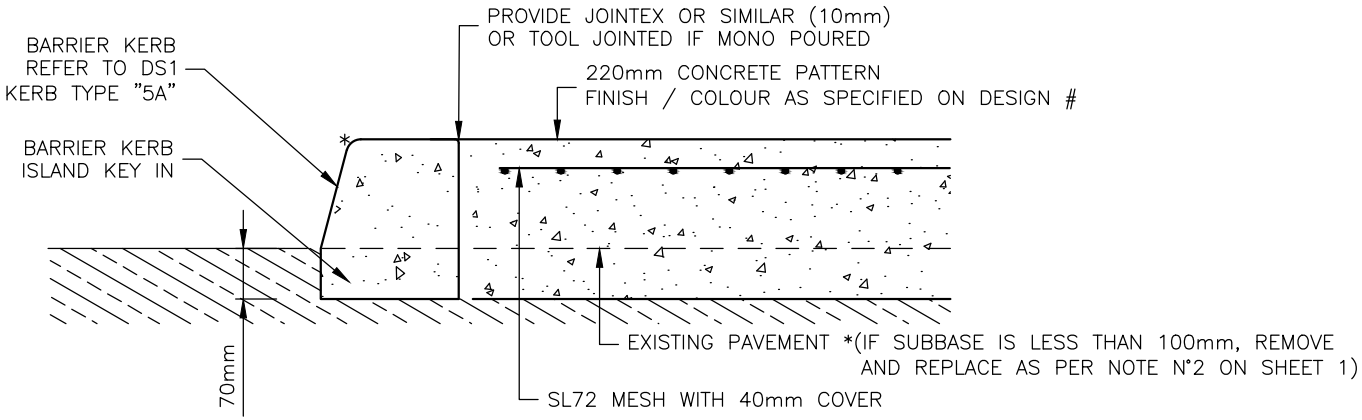

CONCRETE TO BE N32 IN ACCORDANCE WITH AS 1379–2007 (R2017) AND AS 3600:2018

* ALL BARRIER KERB SHARP EDGES TO CHAMFER / FILLET WITH R20

SPLITTER ISLAND DETAIL X-X

NOTES

1. ALL PAVEMENT MARKING AND SIGN POSTING TO BE IN ACCORDANCE WITH ROADS AND MARITIME SERVICES SUPPLEMENTS, RMS DELINEATION MANUAL, AUSTROADS GUIDES, AUSTRALIAN STANDARDS (AS 1742) AND RMS SPECIFICATIONS R141 AND R143
2. ALL RETROREFLECTIVE RAISED PAVEMENT MARKERS TO BE IN ACCORDANCE WITH RMS SPECIFICATION R142 AND RMS "DELINEATION" SECTION 15 – RAISED PAVEMENT MARKERS
3. PROVIDE "KEEP LEFT" SIGNS "R2–3L" OR "R2–3AAL" ON IMPACT RECOVERY POSTS AS SHOWN ON TRAFFIC MANAGEMENT PLAN.
4. ALL CONCRETE ISLAND KERB FACES TO BE PAINTED WITH APPROVED REFLECTIVE WHITE PAINT IN ACCORDANCE WITH RMS SPECIFICATION R141
5. LONGITUDINAL LINEMARKING TO BE PAINT AND ALL TRANSVERSE LINEMARKING TO BE THERMOPLASTIC UNLESS STATED OTHERWISE.

B.B.....DOUBLE WHITE BARRIER LINE
E.4.....200mm WIDE CONTINUOUS WHITE LINE
T.B.....HOLDING LINE
.....BI–DIRECTIONAL YELLOW REFLECTORISED PAVEMENT MARKER (TYPE "YY")
.....MONO DIRECTIONAL YELLOW REFLECTORISED PAVEMENT MARKER (TYPE "Y")
.....MONO DIRECTIONAL RED REFLECTORISED PAVEMENT MARKER (TYPE "R")

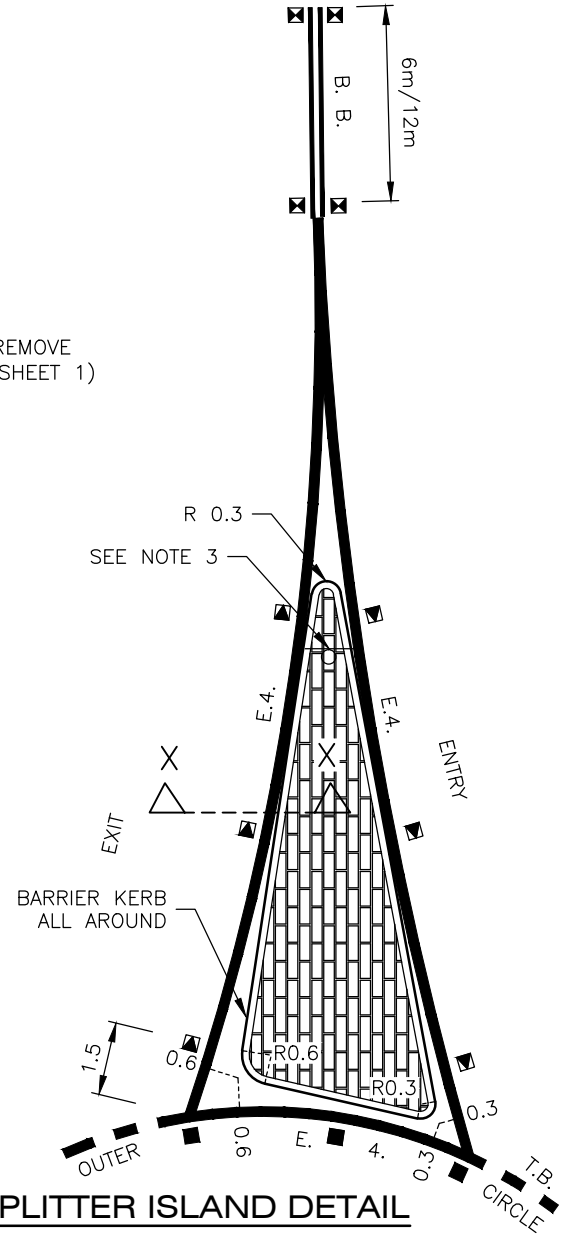

SPLITTER ISLAND DETAIL

AMENDMENTS			
No.	DETAIL	DATE	CHECKED

DESIGNED / DRAWN Date:
DESIGN CHECKED & APPROVED Date:
MANAGER CAPITAL PROJECTS Date:

Scale: N.T.S. **FINAL**
ASSET OWNER Date:
GROUP MANAGER CITY ASSETS & ENVIRONMENT Date:

CITY OF PARRAMATTA COUNCIL

ROUNDABOUT
BARRIER KERB SPLITTER ISLAND DETAIL
WITH NO PEDESTRIAN BREAK

DETAILS AND NOTES

PLAN N° DS17
Sheet No : 3
Revision :

ROUNDABOUT

TYPICAL CENTRE ISLAND AND ANNULUS CONSTRUCTION
DIMENSIONS AND LEVEL CONTROL FOR VARYING ROAD
PAVEMENT GRADES.

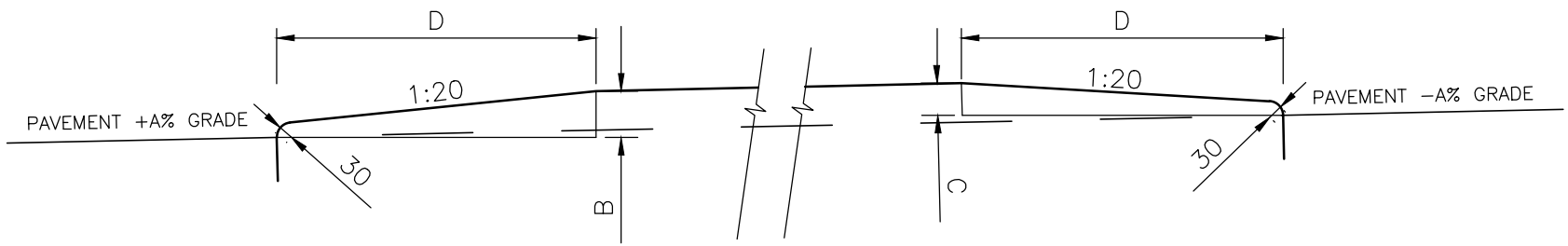

N.T.S.

DIMENSIONS FOR ANNULI

FOR ROUNDABOUT 110mm HIGH FROM
EXISTING ROAD SURFACE

%GRADE A	B(mm)	C(mm)	D(m)
0%	110	110	1.5
1%	125	95	1.5
2%	140	80	1.5
3%	155	65	1.5
4%	170	50	1.5
5%	185	35	1.5
6%	200	20	1.5
7%	215	5	1.5

TO BE READ IN CONJUNCTION WITH
DS17A SHT1, DS17 SHT1 AND DESIGN PLAN

AMENDMENTS			
No.	DETAIL	DATE	CHECKED

DESIGNED / DRAWN Date:
DESIGN CHECKED & APPROVED Date:
MANAGER CAPITAL PROJECTS Date:

Scale: N.T.S. **FINAL**
ASSET OWNER Date:
GROUP MANAGER CITY ASSETS & ENVIRONMENT Date:

CITY OF PARRAMATTA COUNCIL

ROUNDABOUT
SETOUT & LEVEL CONTROLS
FOR VARYING PAVEMENT LEVELS

CROSS SECTION VIEW WITH DIMENSIONS

PLAN N° DS17
Sheet No : 4
Revision :

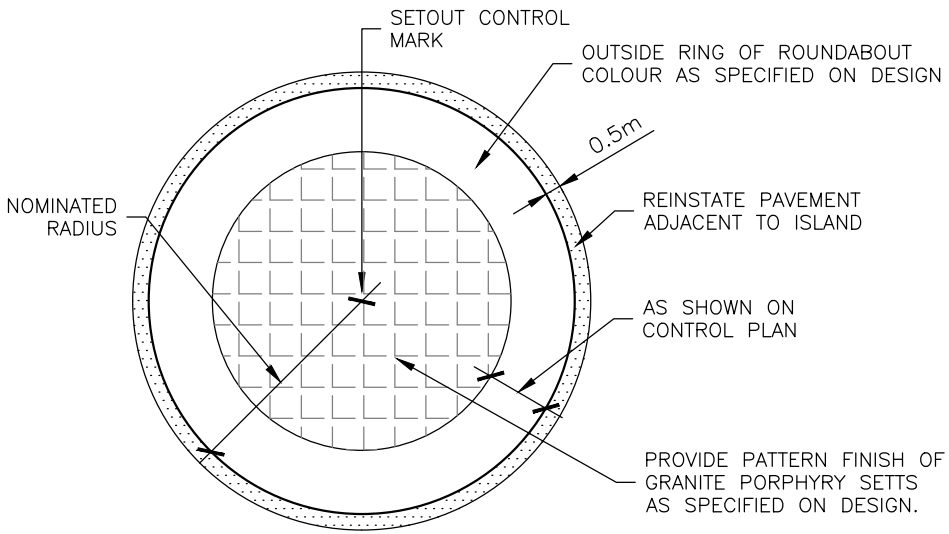

PLAN

CONSTRUCTION NOTES

1. BOX OUT CENTRE ISLAND AS SHOWN. REMOVE AND REPLACE UNSOUND SUBGRADE IF REQUIRED.
2. PROVIDE MINIMUM 150mm D.G.B.20 BASE TO ANNULUS SHAPE AND COMPACT TO 100% STANDARD MAXIMUM DRY DENSITY IN ACCORDANCE WITH A.S. 1289.5.1.1:2017
3. IF A RESHEET >30mm IS REQUIRED OVER INTERSECTION, CENTRE ISLAND IS TO BE RAISED TO MAINTAIN 50mm LIP AS SHOWN. (REFER TO ANNULUS DETAIL)
4. COMMENCE CONSTRUCTION AT ANNULUS AND WORK TOWARDS CENTRE.
5. CONCRETE TO BE N32 AND SLUMP OF 80mm IN ACCORDANCE WITH AS 1379–2007 (R2017) AND AS 3600:2018.
6. ISLAND TO BE LOCATED USING CENTRE CONTROL MARK PROVIDED.
7. INTERSECTION TO BE TRAFFIC MANAGED AS A ROUNDABOUT THROUGHOUT CONSTRUCTION.
8. MESH TO HAVE MINIMUM 300mm LAP LENGTH.
9. GRADIENT TO BE CONTROLLED BY EXISTING OR PROPOSED PAVEMENT. (REFER DATUM LINE)
10. ISLAND MAY BE POURED IN TWO PARTS DEPENDING ON SIZE.
11. PROVIDE 30mmx10mm MASTIC JOINT TO TOP HALF OF SLAB. MESH TO CONTINUE THROUGH JOINT, IF CONSTRUCTED IN TWO PARTS.
12. WHERE SEMITRAILER OR LARGER ARTICULATED VEHICLE MOVEMENT EXPECTED, ANNULUS GRADIENT SHALL BE NO STEEPER THAN 1:40 (PREFERRED 1:50)
13. ALL DIMENSIONS ARE IN MILLIMETRES UNLESS OTHERWISE SHOWN.

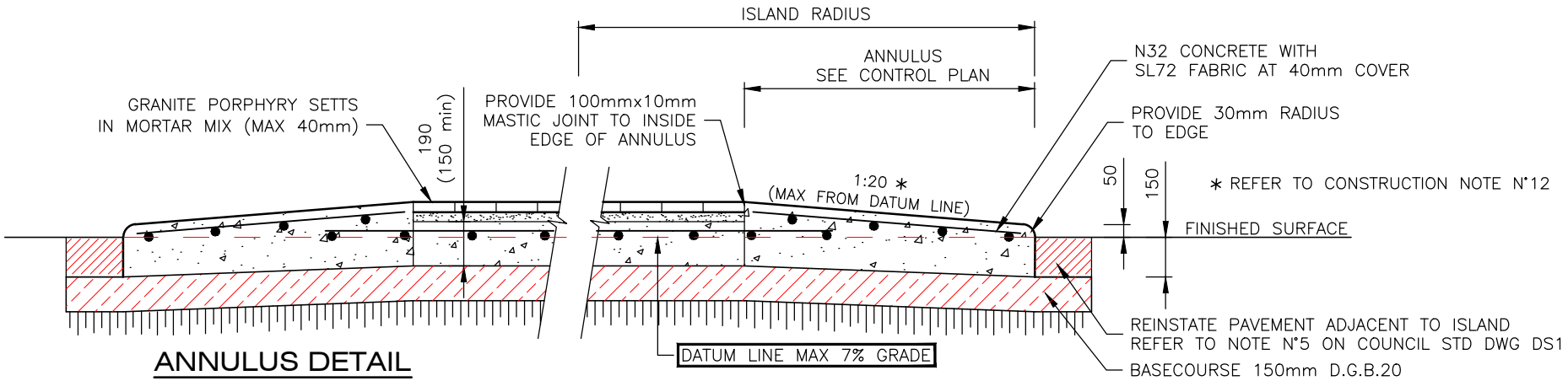

ANNULUS DETAIL

AMENDMENTS			
No.	DETAIL	DATE	CHECKED

DESIGNED / DRAWN Date:
DESIGN CHECKED & APPROVED Date:
MANAGER CAPITAL PROJECTS Date:

Scale: N.T.S. **FINAL**
ASSET OWNER Date:
GROUP MANAGER CITY ASSETS & ENVIRONMENT Date:

CITY OF PARRAMATTA COUNCIL

ROUNDABOUT WITH PORPHYRY SETTS
CENTRE ISLAND AND ANNULUS DETAIL

PLAN, DETAIL AND CONSTRUCTION NOTES

PLAN N° DS17A
Sheet No : 1
Revision :

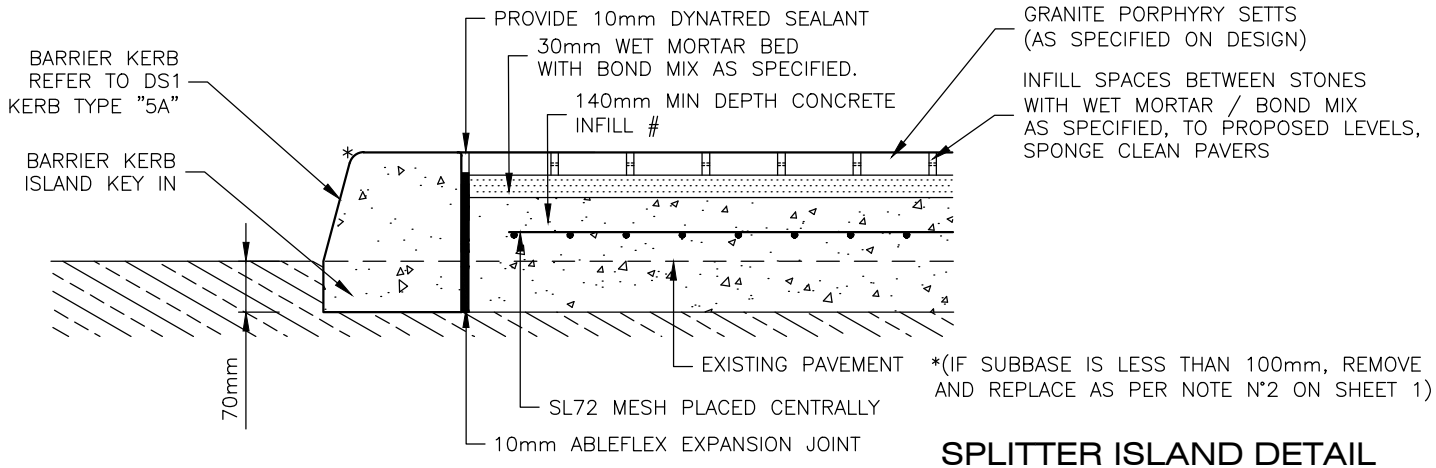

CONCRETE TO BE N32 IN ACCORDANCE WITH AS 1379–2007 (R2017) AND AS 3600:2018

* ALL BARRIER KERB SHARP EDGES TO CHAMFER / FILLET WITH R20

SPLITTER ISLAND DETAIL X-X

NOTES

1. ALL PAVEMENT MARKING AND SIGN POSTING TO BE IN ACCORDANCE WITH ROADS AND MARITIME SERVICES SUPPLEMENTS, RMS DELINEATION MANUAL, AUSTROADS GUIDES, AUSTRALIAN STANDARDS (AS 1742) AND RMS SPECIFICATIONS R141 AND R143
2. ALL RETROREFLECTIVE RAISED PAVEMENT MARKERS TO BE IN ACCORDANCE WITH RMS SPECIFICATION R142 AND RMS "DELINEATION" SECTION 15 – RAISED PAVEMENT MARKERS
3. PROVIDE "KEEP LEFT" SIGNS "R2–3L" OR "R2–3AAL" ON IMPACT RECOVERY POSTS AS SHOWN ON THE TRAFFIC MANAGEMENT PLAN.
4. ALL CONCRETE ISLAND KERB FACES TO BE PAINTED WITH APPROVED REFLECTIVE WHITE PAINT IN ACCORDANCE WITH RMS SPECIFICATION R141
5. LONGITUDINAL LINEMARKING TO BE PAINT AND ALL TRANSVERSE LINEMARKING TO BE THERMOPLASTIC UNLESS STATED OTHERWISE.

B.B.....DOUBLE WHITE BARRIER LINE
E.4.....200mm WIDE CONTINUOUS WHITE LINE
T.B.....HOLDING LINE
.....BI–DIRECTIONAL YELLOW REFLECTORISED PAVEMENT MARKER (TYPE "YY")
.....MONO DIRECTIONAL YELLOW REFLECTORISED PAVEMENT MARKER (TYPE "Y")
.....MONO DIRECTIONAL RED REFLECTORISED PAVEMENT MARKER (TYPE "R")

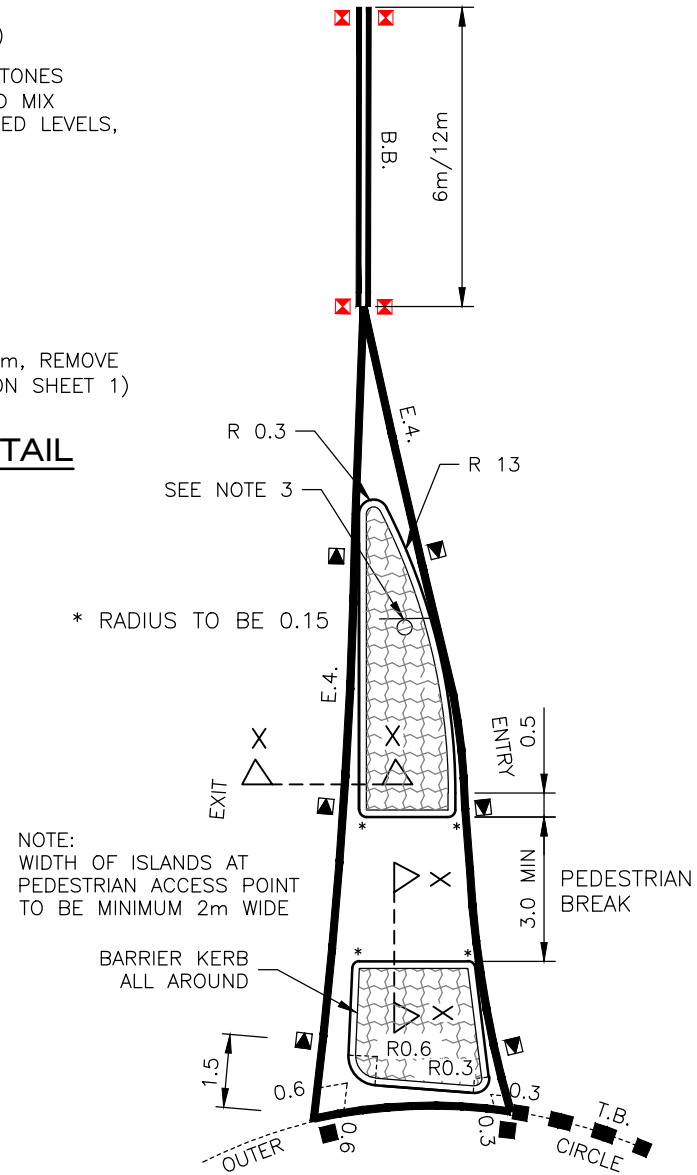

SPLITTER ISLAND DETAIL

AMENDMENTS			
No.	DETAIL	DATE	CHECKED

DESIGNED / DRAWN Date:
DESIGN CHECKED & APPROVED Date:
MANAGER CAPITAL PROJECTS Date:

Scale: N.T.S.
FINAL
ASSET OWNER Date:
GROUP MANAGER CITY ASSETS & ENVIRONMENT Date:

CITY OF PARRAMATTA COUNCIL

ROUNDABOUT WITH PORPHYRY SETTS
BARRIER KERB SPLITTER ISLAND DETAIL WITH MIN 3.0m PEDESTRIAN BREAK

DETAILS AND NOTES

PLAN N° DS17A
Sheet No : 2
Revision :

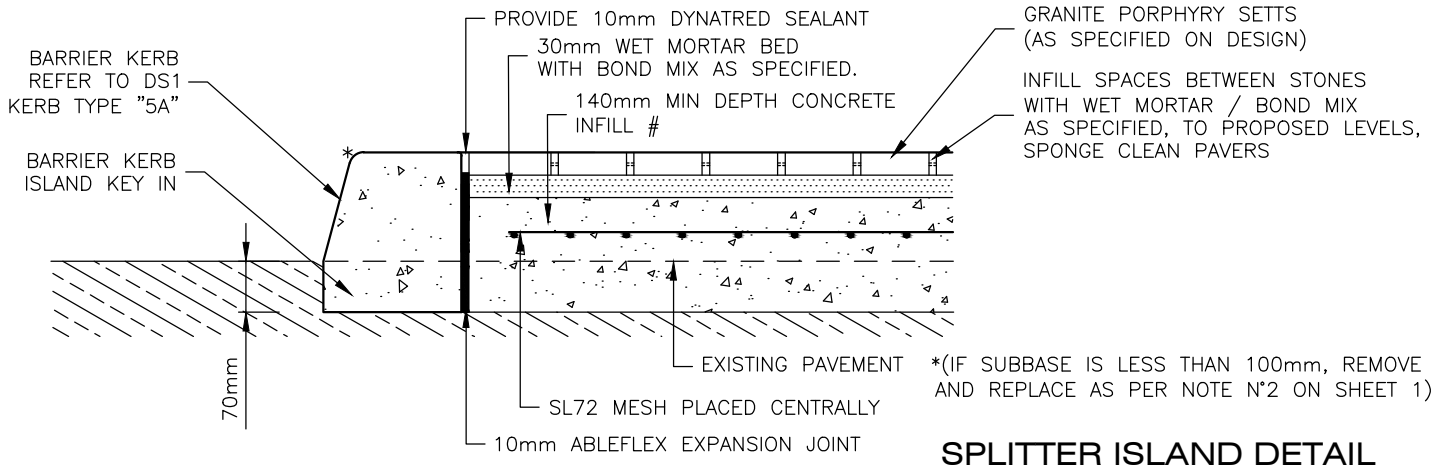

SPLITTER ISLAND DETAIL X-X

CONCRETE TO BE N32 IN ACCORDANCE WITH AS 1379–2007 (R2017) AND AS 3600:2018

* ALL BARRIER KERB SHARP EDGES TO CHAMFER / FILLET WITH R20

NOTES

1. ALL PAVEMENT MARKING AND SIGN POSTING TO BE IN ACCORDANCE WITH ROADS AND MARITIME SERVICES SUPPLEMENTS, RMS DELINEATION MANUAL, AUSTROADS GUIDES, AUSTRALIAN STANDARDS (AS 1742) AND RMS SPECIFICATIONS R141 AND R143
2. ALL RETROREFLECTIVE RAISED PAVEMENT MARKERS TO BE IN ACCORDANCE WITH RMS SPECIFICATION R142 AND RMS "DELINEATION" SECTION 15 – RAISED PAVEMENT MARKERS
3. PROVIDE "KEEP LEFT" SIGNS "R2–3L" OR "R2–3AAL" ON IMPACT RECOVERY POSTS AS SHOWN ON THE TRAFFIC MANAGEMENT PLAN.
4. ALL CONCRETE ISLAND KERB FACES TO BE PAINTED WITH APPROVED REFLECTIVE WHITE PAINT IN ACCORDANCE WITH RMS SPECIFICATION R141
5. LONGITUDINAL LINEMARKING TO BE PAINT AND ALL TRANSVERSE LINEMARKING TO BE THERMOPLASTIC UNLESS STATED OTHERWISE.

B.B.....DOUBLE WHITE BARRIER LINE
E.4.....200mm WIDE CONTINUOUS WHITE LINE
T.B.....HOLDING LINE
.....BI–DIRECTIONAL YELLOW REFLECTORISED PAVEMENT MARKER (TYPE "YY")
.....MONO DIRECTIONAL YELLOW REFLECTORISED PAVEMENT MARKER (TYPE "Y")
.....MONO DIRECTIONAL RED REFLECTORISED PAVEMENT MARKER (TYPE "R")

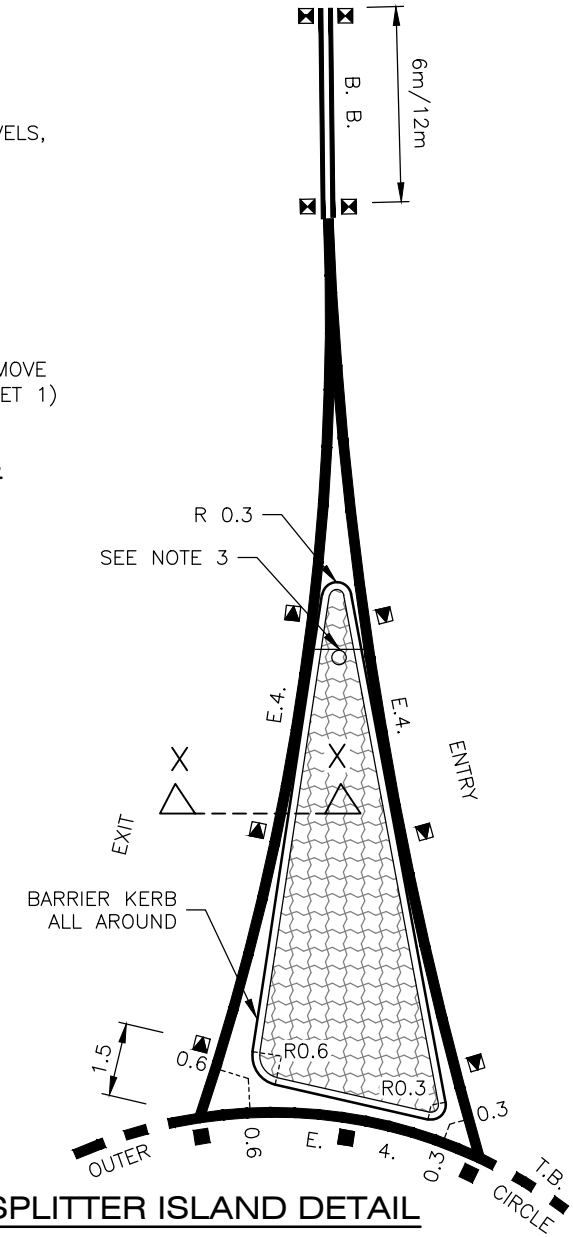

SPLITTER ISLAND DETAIL

AMENDMENTS			
No.	DETAIL	DATE	CHECKED

DESIGNED / DRAWN Date:
DESIGN CHECKED & APPROVED Date:
MANAGER CAPITAL PROJECTS Date:

Scale: N.T.S. **FINAL**
ASSET OWNER Date:
GROUP MANAGER CITY ASSETS & ENVIRONMENT Date:

CITY OF PARRAMATTA COUNCIL

ROUNDABOUT WITH PORPHYRY SETTS
BARRIER KERB SPLITTER ISLAND DETAIL WITH NO PEDESTRIAN BREAK

DETAILS AND NOTES

PLAN N° DS17A
Sheet No : 3
Revision :

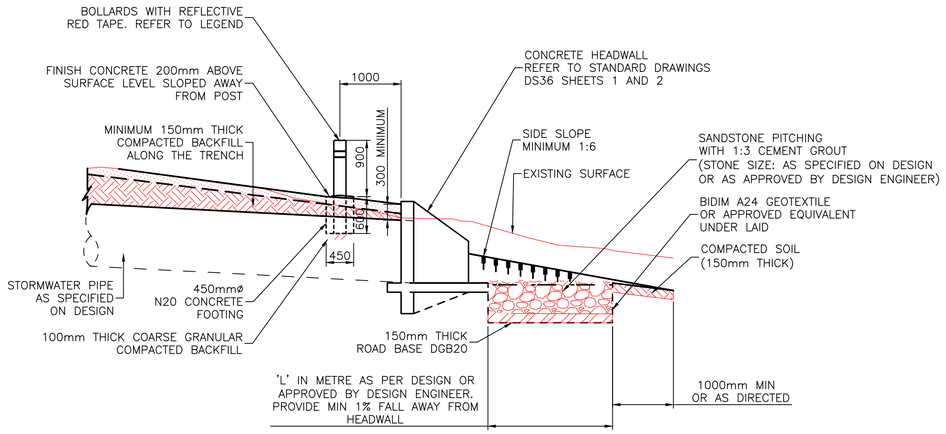

DOWNSTREAM PROTECTION WORKS
SECTION VIEW

SCALE N.T.S.

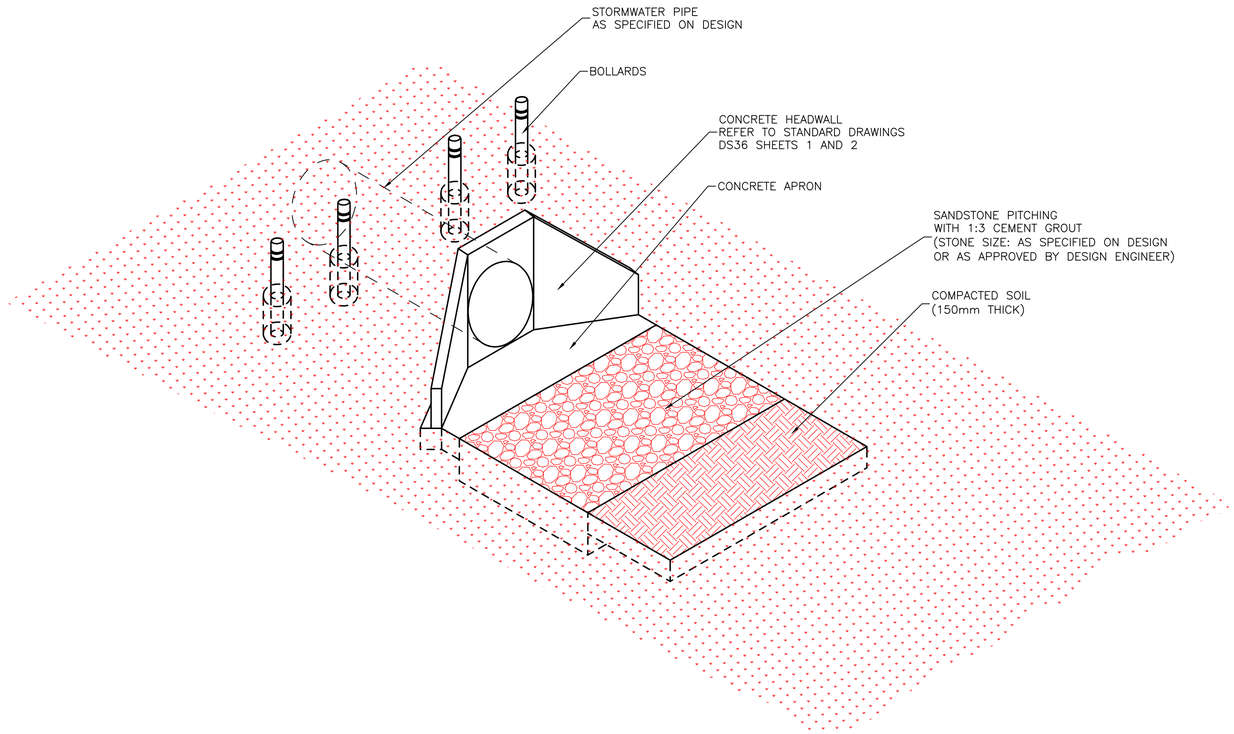

DOWNSTREAM PROTECTION WORKS
SCHEMATIC DETAILS

SCALE N.T.S.

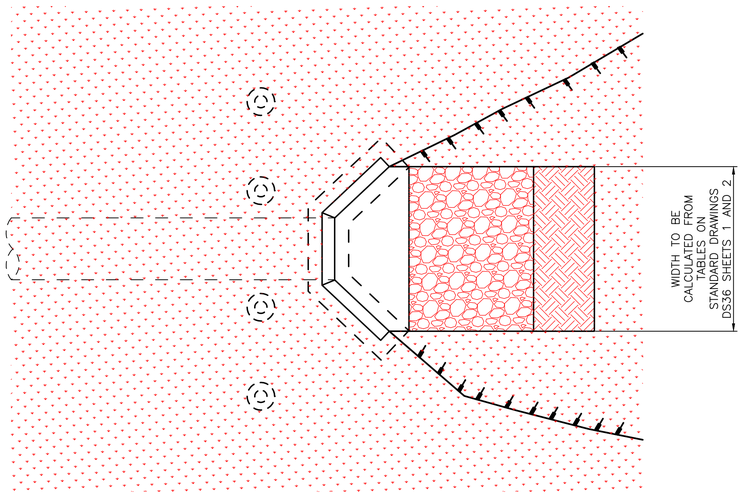

DOWNSTREAM PROTECTION WORKS
PLAN VIEW

SCALE N.T.S.

LEGEND

- GRASS SWALE / CHANNEL PROVIDE 150mm THICK TOPSOIL AND GRASS SAME AS EXISTING SURROUNDING SPECIES
- SANDSTONE PITCHING (SIZE: AS SPECIFIED ON DESIGN OR AS APPROVED BY DESIGN ENGINEER) WITH 1:3 CEMENT GROUT AND BIDIM A24 (OR APPROVED EQUIVALENT) GEOTEXTILE UNDER LAID
- 150mm THICK ROAD BASE DGB20 COURSE UNDER GEOTEXTILE
- COMPACTED SOIL, MINIMUM 150mm THICK
- COMPACTED TOPSOIL, MINIMUM 150mm THICK
- 200mmø TREATED PINE KOPPERS LOG BOLLARDS OR APPROVED EQUIVALENT (x4 NOS. OR AS SPECIFIED ON DESIGN) WITH CONCRETE FOOTINGS 1.5m APART.
  INSTALLATION SHOULD BE IN ACCORDANCE WITH MANUFACTURER'S INSTALLATION REQUIREMENTS.
  PROVIDE REFLECTIVE RED TAPES.
  BOLLARDS TO BE INSTALLED CLEAR OF PIPE.

AMENDMENTS		
No.	DETAIL	DATE

DESIGNED / DRAWN ...../...../.....

DESIGN CHECKED & APPROVED ...../...../.....

MANAGER CAPITAL PROJECTS ...../...../.....

Scale: N.T.S. **FINAL**

ASSET OWNER ...../...../.....

GROUP MANAGER CITY ASSETS & ENVIRONMENT ...../...../.....

CITY OF PARRAMATTA COUNCIL

DOWNSTREAM PROTECTION WORK DETAILS

PLAN VIEW, SECTION AND DETAIL

PLAN NUMBER

DS18

Sheet No : 1 of 1

Revision :

10, May, 2019 11:41:14 a.m.
Drawing: DS18.DWG

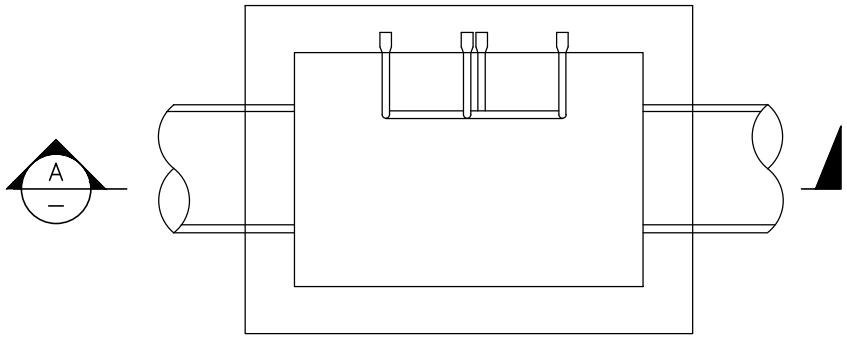

PLAN
N.T.S.

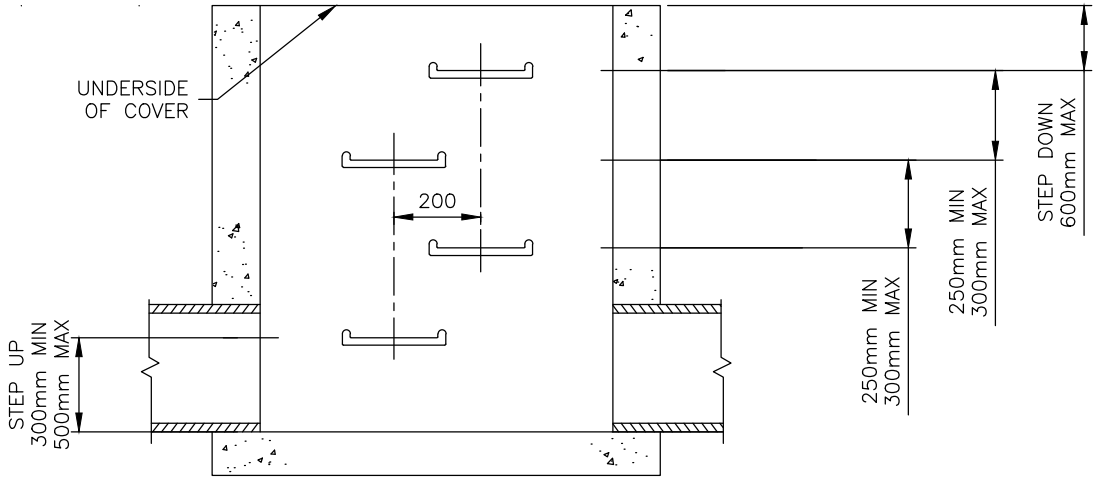

SECTION A
N.T.S.

STEP IRON LADDER NOTES:

1. PITS DEEPER THAN 1200mm MUST BE FITTED WITH STEP IRONS.
2. VERTICAL RISE NOT TO EXCEED 6m.
3. STEP IRONS TO BE LOCATED DESIRABLY ON A WALL WITHOUT PIPE OPENINGS AND ON ONE OF THE LONG SIDES OF THE PIT AND ARE NOT TO OBSTRUCT MAIN FLOW.
4. STEEL FOR STEP IRONS SHALL BE STRUCTURAL GRADE 250 TO AS/NZS 3679.1:2016 MINIMUM 20mm ø DESIRABLY 24mm ø.
5. STEP IRONS SHALL HAVE SHARP EDGES ROUNDED AND HOT DIP GALVANISED AFTER FABRICATION TO AS/NZS 4680:2006 (R2017).
6. ALL BENDS TO BE FORMED AROUND 12mm ø PIN.
7. STEP IRONS TO COMPLY WITH AS 1657:2018 AND MANUFACTURERS SPECIFICATIONS EN 13101:2002.
8. TO AVOID SLIPS GALVANISED STEEL STEP IRONS MUST BE CRANKED. PLASTIC COATED STEP IRONS SHOULD BE TEXTURED FOR GRIP AND MUST HAVE FORMED RETURNS ON SIDES.
9. STEP IRONS SHALL BE PROVIDED WITH SUITABLE CORROSION PROTECTION (eg. PLASTIC ENCAPSULATION) IN ACCORDANCE WITH EN 13101:2002.
10. STEP IRONS TO BE SPACED EVENLY FROM TOP TO BOTTOM NOT LESS THAN 250mm OR MORE THAN 300mm.
11. THE TOP OF THE BOTTOM RUNG MUST NOT BE MORE THAN 500mm OR LESS THAN 300mm ABOVE THE INVERT OF THE PIT.
12. THE TOP OF THE UPPER MOST RUNG MUST NOT BE MORE THAN 600mm BELOW THE TOP OF THE PIT.
13. FOR PRECAST PITS, STEP IRONS SHALL BE LOAD TESTED TO AS 4198–1994.
14. ALL DIMENSIONS ARE IN MILLIMETRES UNLESS OTHERWISE SHOWN.

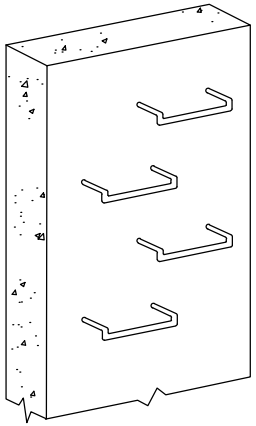

ISOMETRIC VIEW

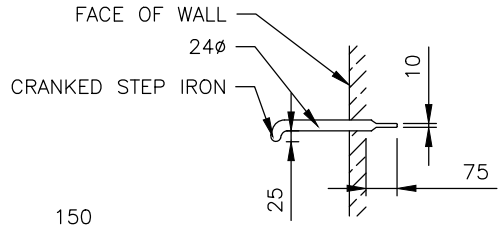

CAST IN-SITU

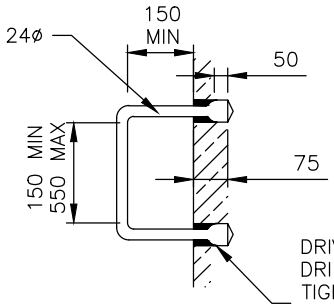

DRILLED HOLES

DRIVE STEP IRONS INTO DRILLED HOLES TO ENSURE TIGHT FIT. HOLES TO BE SEALED WITH MORTAR. STEP IRONS MAY ALSO BE CHEMSET INTO POSITION

STEP IRON DETAILS
N.T.S. (in mm)

AMENDMENTS			
No.	DETAIL	DATE	CHECKED

DESIGNED / DRAWN Date:
DESIGN CHECKED & APPROVED Date:
MANAGER CAPITAL PROJECTS Date:

Scale: N.T.S. **FINAL**
ASSET OWNER Date:
GROUP MANAGER CITY ASSETS & ENVIRONMENT Date:

CITY OF PARRAMATTA COUNCIL

STEP IRONS

DETAILS AND NOTES

PLAN N° DS19
Sheet No : 1 of 1
Revision :

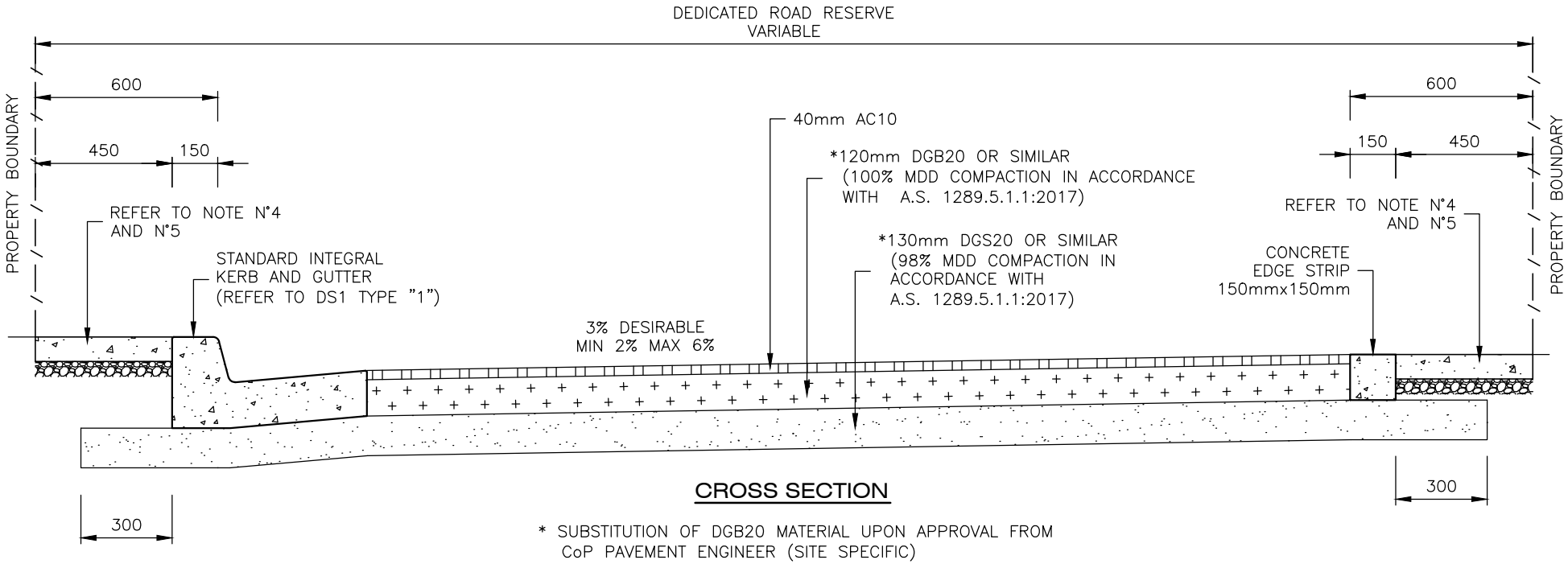

CROSS SECTION

* SUBSTITUTION OF DGB20 MATERIAL UPON APPROVAL FROM CoP PAVEMENT ENGINEER (SITE SPECIFIC)

NOTE

1. CONCRETE TO BE A MINIMUM OF N25 COMPRESSIVE STRENGTH (Fc) AT 28 DAYS, IN ACCORDANCE WITH AS 1012.9:2014, AS 1379–2007 (R2017) AND AS 3600:2018
2. TWO WAY CROSS FALL PERMITTED WHERE NECESSARY. (REFER TO DESIGN ENGINEER)
3. PAVEMENT TREATMENT SPECIFIED TYPICAL. TREATMENT TO SITE SPECIFIC, PAVEMENT TESTING AND DESIGN IN ACCORDANCE WITH AUSTROADS PAVEMENT DESIGN GUIDE MAY BE REQUIRED.
4. AREA BETWEEN STANDARD KERB AND GUTTER OR CONCRETE EDGE STRIP AND PROPERTY BOUNDARY TO BE 80mm THICK CONCRETE ON 50mm (MIN) COMPACTED ROAD BASE DGB20 OR SIMILAR.
5. COMPACTION TO AS1289.5.1.1:2017 (METHODS OF TESTING SOLIDS FOR ENGINEERING PURPOSES)
6. PRIME OR PRIME SEAL MUST BE PLACED ON DGB20 BEFORE PLACEMENT OF WEARING COURSE
7. IF SUB–GRADE CBR IS LESS THAN 3, SUB–GRADE SHOULD BE IMPROVED.
8. ALL DIMENSIONS ARE IN MILLIMETRES UNLESS OTHERWISE SHOWN.

AMENDMENTS			
No.	DETAIL	DATE	CHECKED

DESIGNED / DRAWN Date:
DESIGN CHECKED & APPROVED Date:
MANAGER CAPITAL PROJECTS Date:

Scale: N.T.S. **FINAL**
ASSET OWNER Date:
GROUP MANAGER CITY ASSETS & ENVIRONMENT Date:

CITY OF PARRAMATTA COUNCIL

TYPICAL CROSS SECTION
LANEWAYS

CROSS SECTION

PLAN N° DS20
Sheet No : 1 of 1
Revision :

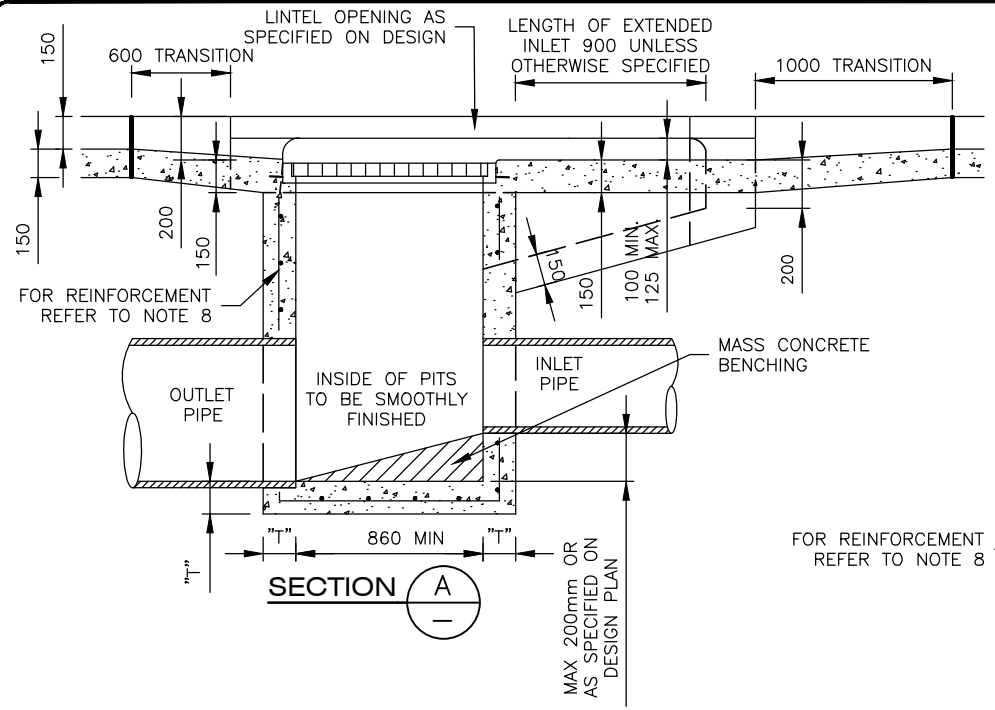

SECTION A

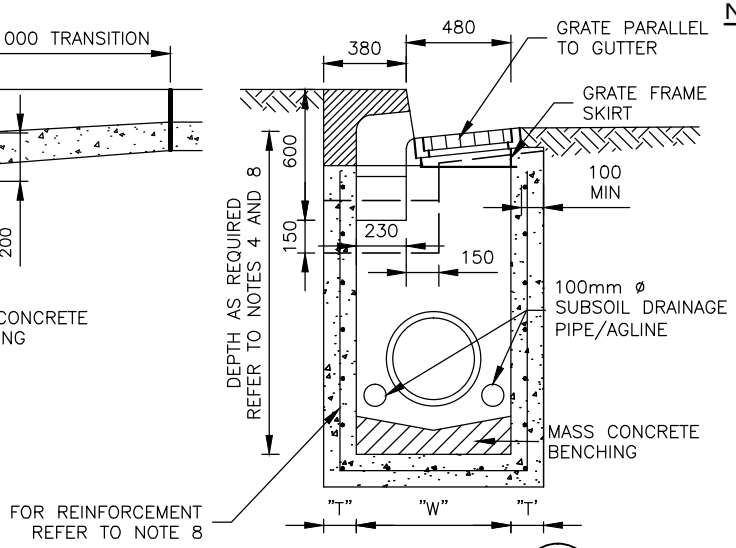

SECTION B

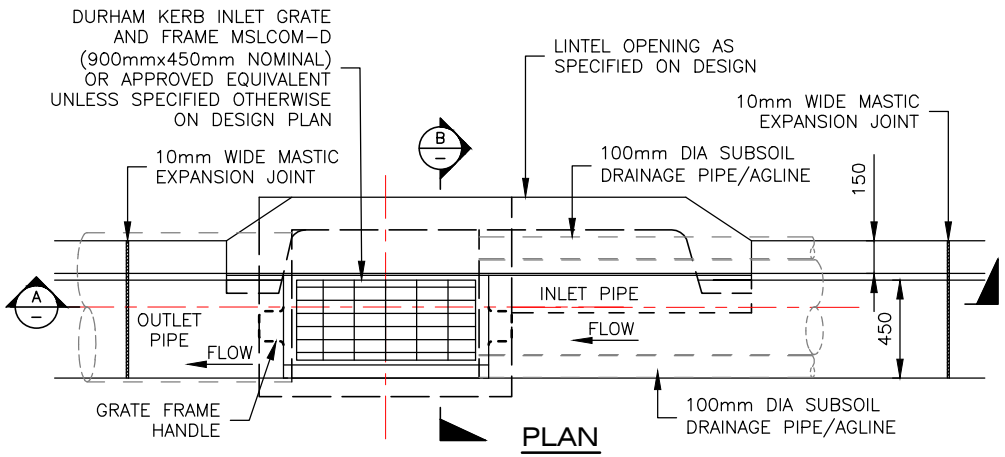

PLAN

WARNING

IN THE LIKELIHOOD THAT ASBESTOS OR OTHER CONTAMINATED CONTAINING MATERIALS MAY BE PRESENT, EXERCISE APPROPRIATE CAUTION AND TREAT IN ACCORDANCE WITH WHS REGULATIONS AND THE EPA CONTAMINATED LAND MANAGEMENT REGULATION.

PIT GRATE AND FRAME

- PIT GRATE AND FRAME ARE TO BE DURHAM DRAINAGE PRODUCTS OR APPROVED EQUIVALENT AND COMPLY TO AS 3996:2019.
- CLASS OF GRATE AND FRAME ARE TO BE
  CLASS "D" FOR ROAD WAY.
  CLASS "C" ELSEWHERE.
- GRATE AND FRAME TO BE "MEDIUM/HEAVY TRAFFICABLE BIKE SAFE.

SUBSOIL DRAINAGE PIPE

100mm DIA. SUBSOIL DRAINAGE PIPE/AGLINE 3.0m LONG WRAPPED IN FABRIC SOCK TO BE PLACED ADJACENT TO INLET PIPES ON BOTH SIDES AND 100mm MINIMUM ABOVE PIT FLOOR. SURROUND SUBSOIL DRAINAGE PIPE/AGLINE WITH 10mm AGGREGATE.

NOTES

1. ALL KERB INLET PITS (ON GRADE) SHALL BE PROVIDED WITH AN EXTENDED INLET 900mm (MIN) LONG ON THE HIGHER SIDE.
2. PITS DEEPER THAN 2500mm TO BE DESIGNED AND CERTIFIED BY A QUALIFIED EXPERIENCED PRACTICING STRUCTURAL ENGINEER. (PRECAST OR CAST IN-SITU)
3. PRE-CAST PITS CAN BE USED ONLY IF THEY ARE CONSISTENT WITH COUNCIL'S MINIMUM REQUIREMENTS AS SHOWN ON COUNCIL'S STANDARD DRAWINGS AND IN ACCORDANCE WITH MANUFACTURERS SPECIFICATIONS AND AT THE DIRECTION OF THE SUPERINTENDENT.
4. STEP IRONS TO BE PROVIDED AT 300mm CENTRES FOR PITS GREATER THAN 1200mm DEEP AND PLACED ON A WALL CLEAR OF FLOW WHERE POSSIBLE IN ACCORDANCE WITH AS 1657:2018. REFER TO COUNCIL STANDARD DRAWING DS19.
5. CONCRETE TO BE A MINIMUM OF N32 IN ACCORDANCE WITH AS 1012, AS 1379-2007 (R2017) AND AS 3600:2018.
6. MINIMUM COVER TO ALL PIPES TO BE 600mm UNDER ROADS AND 450 ELSEWHERE.
7. ALL INTERNAL PIT CORNERS TO BE PROVIDED WITH BENCHING TO IMPROVE FLOW.
8. WHERE INTERNAL WIDTH EXCEEDS 750mm OR DEPTH EXCEEDS 1200mm WALLS TO BE REINFORCED. PROVIDE N16 REINFORCEMENT AT 250mm CENTRE/CENTRE BOTH WAYS OR MESH SL72 CENTRALLY PLACED.
9. MINIMUM WALL AND BASE THICKNESS MUST BE 150mm ("T") AND WHERE PIT DEPTH EXCEEDS 1200mm TO BE 200mm ("T") OR AS SPECIFIED ON THE DESIGN.
10. MINIMUM WIDTH OF "W" SHOULD BE OD (OUTER DIAMETER) OF LARGER PIPE + 200mm.
11. SELECTED GRANULAR MATERIAL BACKFILL SHALL BE PLACED TO FILL ALL EXCAVATED VOIDS. REFER TO AS / NZS 3725:2007.
12. ALL PIPES TO BE LAID SO THAT THEIR CENTRELINES INTERSECT AT THE CENTRE OF THE PIT.
13. ALL DIMENSIONS ARE IN MILLIMETRES UNLESS STATED OTHERWISE.

AMENDMENTS			
No.	DETAIL	DATE	CHECKED

DESIGNED / DRAWN Date:
DESIGN CHECKED & APPROVED Date:
MANAGER CAPITAL PROJECTS Date:

Scale: N.T.S **FINAL**
ASSET OWNER Date:
GROUP MANAGER CITY ASSETS & ENVIRONMENT Date:

CITY OF PARRAMATTA COUNCIL

KERB INLET PIT (ON GRADE)

PLAN VIEW, SECTIONS AND NOTES

PLAN N° DS21

Sheet No : 1 of 1

Revision :

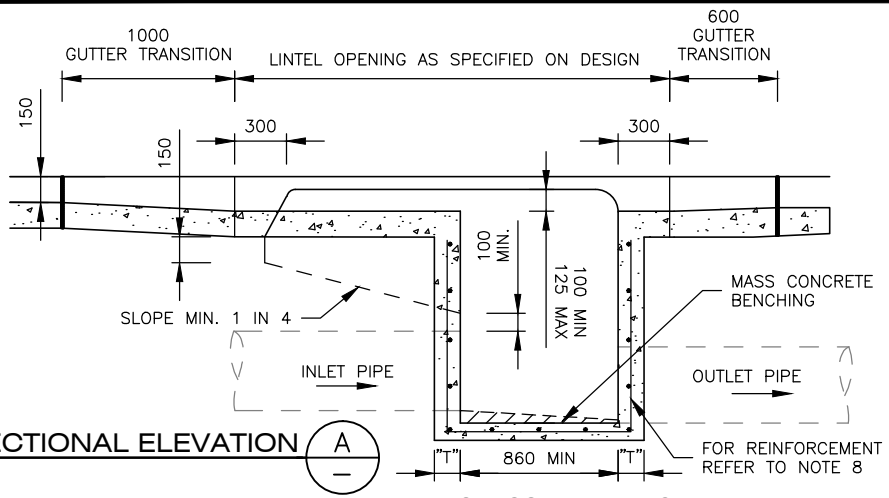

SECTIONAL ELEVATION A

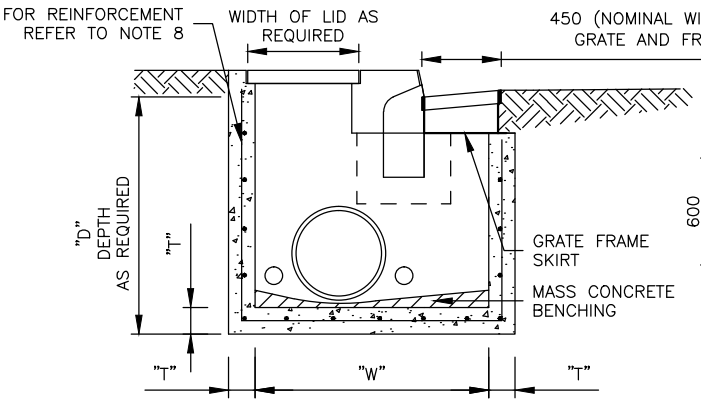

SECTION B

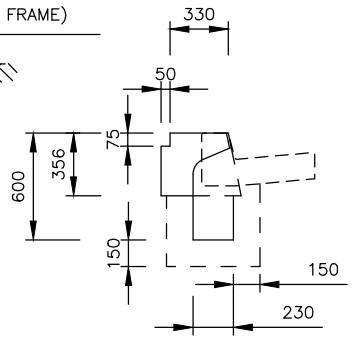

SECTION C
(GULLY)

PRECAST COMPONENTS:-

PIT SURROUND – HOUSING COMMISSION RM14
LINTEL – HOUSING COMMISSION RM5 (COUNCIL STANDARD).

PIT GRATE AND FRAME

- PIT GRATE AND FRAME ARE TO BE DURHAM DRAINAGE PRODUCTS OR APPROVED EQUIVALENT AND COMPLY TO AS 3996:2019.
- CLASS OF GRATE AND FRAME ARE TO BE
  CLASS "D" FOR ROAD WAY.
  CLASS "C" ELSEWHERE
- GRATE AND FRAME TO BE "MEDIUM/HEAVY DUTY" TRAFFICABLE BIKE SAFE.

SUBSOIL DRAINAGE PIPE:

100mm DIA. SUBSOIL DRAINAGE PIPE/AGLINE 3.0m LONG WRAPPED IN FABRIC SOCK TO BE PLACED ADJACENT TO INLET PIPES ON BOTH SIDES AND 100mm MINIMUM ABOVE PIT FLOOR. SURROUND SUBSOIL DRAINAGE PIPE/AGLINE WITH 10mm AGGREGATE.

WARNING

IN THE LIKELIHOOD THAT ASBESTOS OR OTHER CONTAMINATED CONTAINING MATERIALS MAY BE PRESENT, EXERCISE APPROPRIATE CAUTION AND TREAT IN ACCORDANCE WITH WHS REGULATIONS AND THE EPA CONTAMINATED LAND MANAGEMENT REGULATION.

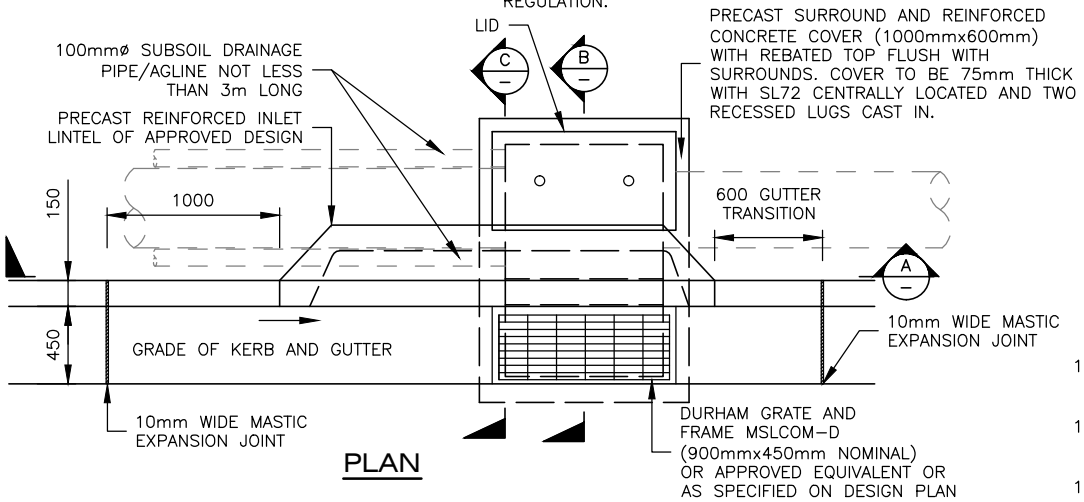

PLAN

NOTES

1. MINIMUM COVER TO ALL PIPES TO BE 600mm UNDER ROADS AND 450mm ELSEWHERE.
2. ALL PIPES TO BE LAID SO THAT THEIR CENTRELINES INTERSECT AT THE CENTRE OF THE PIT.
3. PITS DEEPER THAN 2500mm TO BE DESIGNED AND CERTIFIED BY A QUALIFIED EXPERIENCED PRACTICING STRUCTURAL ENGINEER. (PRECAST OR CAST IN–SITU)
4. PRECAST PITS CAN BE USED ONLY IF THEY ARE CONSISTENT WITH COUNCIL'S MINIMUM REQUIREMENTS AS SHOWN ON COUNCIL'S STANDARD DRAWINGS AND IN ACCORDANCE WITH MANUFACTURERS SPECIFICATIONS AND AT THE DIRECTION OF THE SUPERINTENDENT.
5. ALL INTERNAL PIT CORNERS TO BE PROVIDED WITH BENCHING TO IMPROVE FLOW.
6. STEP IRONS TO BE PROVIDED AT 300mm CENTRES FOR PITS GREATER THAN 1200mm DEEP AND PLACED ON A WALL CLEAR OF FLOW WHERE POSSIBLE IN ACCORDANCE WITH AS 1657:2018. REFER TO COUNCIL STANDARD DS19.
7. WHERE INTERNAL WIDTH EXCEEDS 750mm OR DEPTH EXCEEDS 1200mm WALLS TO BE REINFORCED. PROVIDE N16 REINFORCEMENT AT 250mm CENTRE/CENTRE BOTH WAYS OR MESH SL72 CENTRALLY PLACED.
8. MINIMUM WALL AND BASE THICKNESS MUST BE 150mm ("T") AND WHERE PIT DEPTH EXCEEDS 1200mm TO BE 200mm ("T") OR AS SPECIFIED IN THE DESIGN.
9. MINIMUM WIDTH OF "W" SHOULD BE OD (OUTER DIAMETER) OF LARGER PIPE + 200mm.
10. CONCRETE TO BE A MINIMUM OF N32 IN ACCORDANCE WITH AS 1012, AS 1379–2007 (R2017) AND AS 3600:2018.
11. SELECTED GRANULAR MATERIAL BACKFILL SHALL BE PLACED TO FILL ALL EXCAVATED VOIDS. REFER TO AS / NZS 3725:2007.
12. ALL DIMENSIONS ARE IN MILLIMETRES UNLESS OTHERWISE SHOWN.

AMENDMENTS			
No.	DETAIL	DATE	CHECKED

DESIGNED / DRAWN Date:
DESIGN CHECKED & APPROVED Date:
MANAGER CAPITAL PROJECTS Date:

Scale: N.T.S. **FINAL**
ASSET OWNER Date:
GROUP MANAGER CITY ASSETS & ENVIRONMENT Date:

CITY OF PARRAMATTA COUNCIL

REAR ACCESS PIT
(ON GRADE)

PLAN, SECTIONAL ELEVATION, SECTIONS AND NOTES

PLAN N° DS22
Sheet No : 1 of 1
Revision :

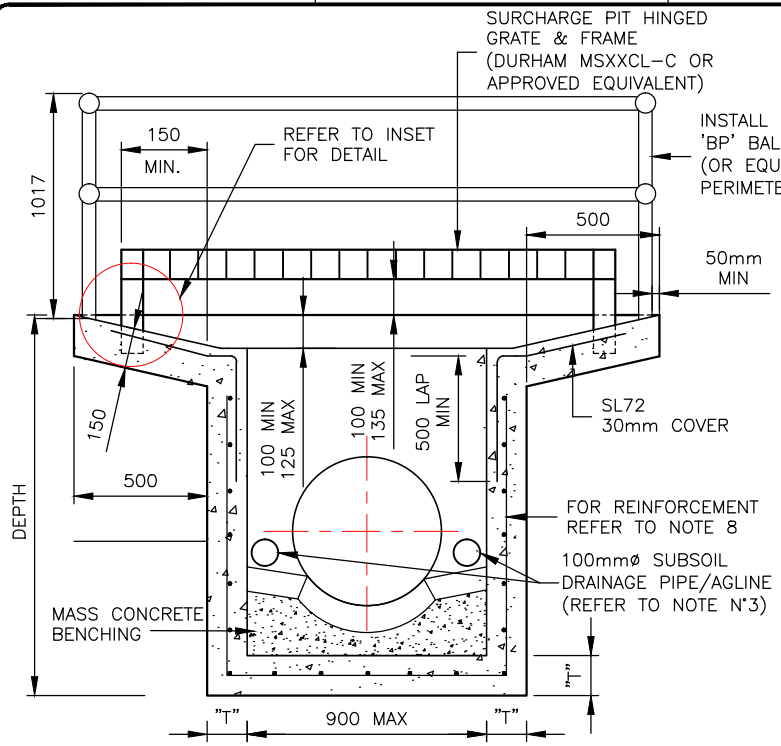

SECTION A

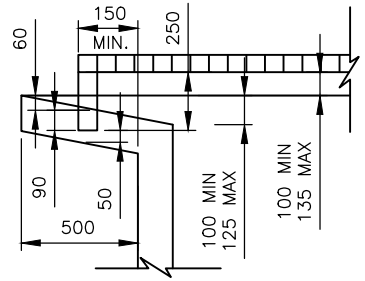

INSET

N.T.S. (mm)

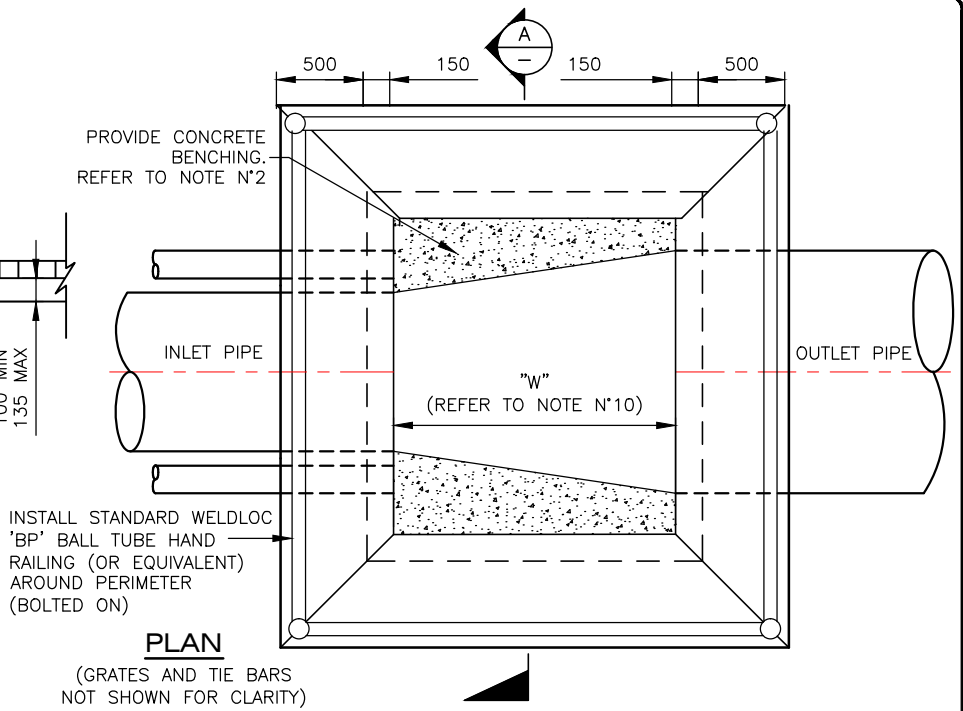

PLAN

(GRATES AND TIE BARS NOT SHOWN FOR CLARITY)

PIPES

MAXIMUM SIZE PIPES

- INLET 750mm DIA
- OUTLET 900mm DIA ON STRAIGHT

GRATE

PIT GRATES TO BE CLASS "C" (150kN) (REFER TO AS 3996:2019)

GRATES ARE HINGED AND LOCKABLE.

WARNING

IN THE LIKELIHOOD THAT ASBESTOS OR OTHER CONTAMINATED CONTAINING MATERIALS MAY BE PRESENT, EXERCISE APPROPRIATE CAUTION AND TREAT IN ACCORDANCE WITH WHS REGULATIONS AND THE EPA CONTAMINATED LAND MANAGEMENT REGULATION.

NOTES

1. CONCRETE TO BE A MINIMUM OF N32 IN ACCORDANCE WITH AS 1012, AS 1379-2007 (R2017) AND AS 3600:2018.
2. PROVIDE CONCRETE BENCHING ACROSS PIT TO SUIT INLET AND OUTLET PIPES AS DETAILED.
3. 100mm SUBSOIL DRAINAGE PIPE/AGLINE 3.0m LONG WRAPPED IN FABRIC SOCK TO BE PLACED ADJACENT TO INLET PIPES ON BOTH SIDES AND 100mm MINIMUM ABOVE PIT FLOOR. SURROUND SUBSOIL DRAINAGE PIPE/AGLINE WITH 10mm AGGREGATE.
4. PITS DEEPER THAN 2500mm TO BE DESIGNED AND CERTIFIED BY A QUALIFIED EXPERIENCED PRACTICING STRUCTURAL ENGINEER. (PRECAST OR CAST IN-SITU)
5. PRE-CAST CONCRETE PITS CAN BE USED ONLY IF THEY ARE CONSISTENT WITH COUNCIL'S MINIMUM REQUIREMENTS AS SHOWN ON COUNCIL'S STANDARD DRAWINGS AND IN ACCORDANCE WITH MANUFACTURERS SPECIFICATIONS AND AT THE DIRECTION OF THE SUPERINTENDENT.
6. STEP IRONS TO BE PROVIDED AT 300mm CENTRES FOR PITS GREATER THAN 1200mm DEEP AND PLACED ON A WALL CLEAR OF FLOW WHERE POSSIBLE IN ACCORDANCE WITH AS 1657:2018. REFER TO COUNCIL STANDARD DRAWING DS19
7. SELECTED GRANULAR BACK FILL IS TO BE PLACED TO FILL ALL EXCAVATED VOIDS. REFER TO AS /NZS 3725:2007
8. WHERE INTERNAL WIDTH EXCEEDS 900mm OR DEPTH EXCEEDS 1200mm WALLS TO BE REINFORCED. PROVIDE N16 REINFORCEMENT AT 250mm CENTRE/CENTRE BOTH WAYS OR MESH SL72 CENTRALLY PLACED.
9. MINIMUM WALL AND BASE THICKNESS MUST BE 150mm ("T") AND WHERE PIT DEPTH EXCEEDS 1200mm TO BE 200mm ("T") OR AS SPECIFIED IN THE DESIGN.
10. MINIMUM WIDTH OF "W" SHOULD BE OD (OUTER DIAMETER) OF LARGER PIPE + 200mm.
11. ALL PIPES TO BE LAID SO THAT THEIR CENTRELINES INTERSECT AT THE CENTRE OF THE PIT.
12. MINIMUM COVER TO ALL PIPES TO BE 600mm UNDER ROADS AND 450mm ELSEWHERE.
13. ALL DIMENSIONS ARE IN MILLIMETRES UNLESS OTHERWISE SHOWN.

AMENDMENTS

No.	DETAIL	DATE	CHECKED

DESIGNED / DRAWN Date:

DESIGN CHECKED & APPROVED Date:

MANAGER CAPITAL PROJECTS Date:

Scale: N.T.S. **FINAL**

ASSET OWNER Date:

GROUP MANAGER CITY ASSETS & ENVIRONMENT Date:

CITY OF PARRAMATTA COUNCIL

INLET PIT WITH RAISED GRATE

PLAN, SECTION AND NOTES

PLAN N° DS23

Sheet No : 1 of 1

Revision :

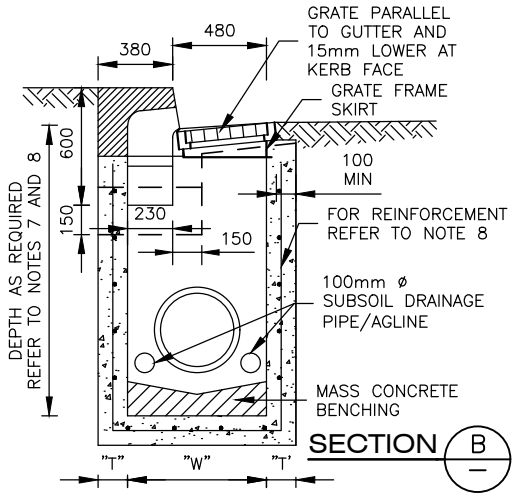

SUBSOIL DRAINAGE PIPE

100mm DIA. SUBSOIL DRAINAGE PIPE/AGLINE 3.0m LONG WRAPPED IN FABRIC SOCK TO BE PLACED ADJACENT TO INLET PIPES ON BOTH SIDES AND 100mm MINIMUM ABOVE PIT FLOOR. SURROUND SUBSOIL DRAINAGE PIPE/AGLINE WITH 10mm AGGREGATE.

PIT GRATE AND FRAME

- PIT GRATE AND FRAME ARE TO BE DURHAM DRAINAGE PRODUCTS OR APPROVED EQUIVALENT AND COMPLY TO AS 3996:2019.
- CLASS OF GRATE AND FRAME ARE TO BE
  CLASS "D" FOR ROAD WAY
  CLASS "C" ELSEWHERE
- GRATE AND FRAME TO BE "MEDIUM/HEAVY DUTY" TRAFFICABLE BIKE SAFE.

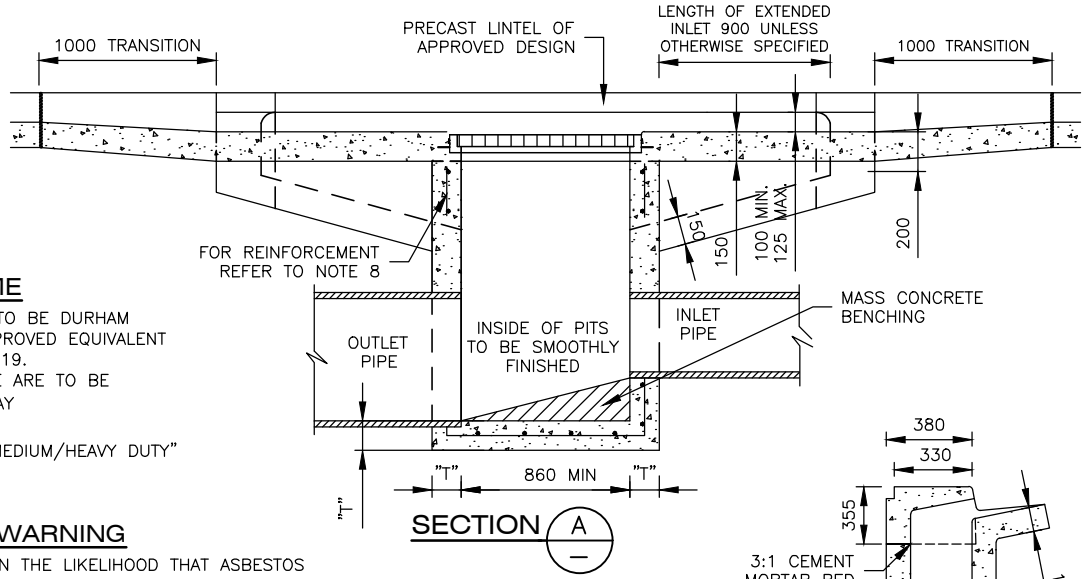

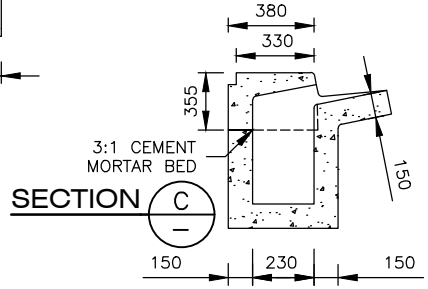

NOTES

1. MINIMUM COVER TO ALL PIPES TO BE 600mm UNDER ROADS AND 450mm ELSEWHERE.
2. ALL PIPES TO BE LAID SO THAT THEIR CENTRELINES INTERSECT AT THE CENTRE OF THE PIT.
3. PITS DEEPER THAN 2500mm TO BE DESIGNED AND CERTIFIED BY A QUALIFIED EXPERIENCED PRACTICING STRUCTURAL ENGINEER. (PRECAST OR CAST IN–SITU)
4. PRECAST PITS CAN BE USED ONLY IF THEY ARE CONSISTENT WITH COUNCIL'S MINIMUM REQUIREMENTS AS SHOWN ON COUNCIL'S STANDARD DRAWINGS AND IN ACCORDANCE WITH MANUFACTURERS SPECIFICATIONS AND AT THE DIRECTION OF THE SUPERINTENDENT.
5. THE KERB/GUTTER APRON BETWEEN THE EXPANSION JOINTS INCORPORATING THE GRATE FRAME MUST BE POURED AS ONE.
6. ALL INTERNAL PIT CORNERS TO BE PROVIDED WITH BENCHING TO IMPROVE FLOW.
7. STEP IRONS TO BE PROVIDED AT 300mm CENTRES FOR PITS GREATER THAN 1200mm DEEP AND PLACED ON A WALL CLEAR OF FLOW WHERE POSSIBLE IN ACCORDANCE WITH AS 1657:2018. REFER TO COUNCIL STANDARD DS19.
8. WHERE INTERNAL WIDTH EXCEEDS 750mm OR DEPTH EXCEEDS 1200mm WALLS TO BE REINFORCED. PROVIDE N16 REINFORCEMENT AT 250mm CENTRE/CENTRE BOTH WAYS OR MESH SL72 CENTRALLY PLACED.
9. MINIMUM WALL AND BASE THICKNESS MUST BE 150mm ("T") AND WHERE PIT DEPTH EXCEEDS 1200mm TO BE 200mm ("T") OR AS SPECIFIED IN THE DESIGN.
10. MINIMUM WIDTH OF "W" SHOULD BE OD (OUTER DIAMETER) OF LARGER PIPE + 200mm.
11. CONCRETE TO BE A MINIMUM OF N32 IN ACCORDANCE WITH AS 1012, AS 1379–2007 (R2017) AND AS 3600:2018.
12. SELECTED GRANULAR MATERIAL BACKFILL SHALL BE PLACED TO FILL ALL EXCAVATED VOIDS. REFER TO AS / NZS 3725:2007.
13. ALL DIMENSIONS ARE IN MILLIMETRES UNLESS OTHERWISE SHOWN.

WARNING

IN THE LIKELIHOOD THAT ASBESTOS OR OTHER CONTAMINATED CONTAINING MATERIALS MAY BE PRESENT, EXERCISE APPROPRIATE CAUTION AND TREAT IN ACCORDANCE WITH WHS REGULATIONS AND THE EPA CONTAMINATED LAND MANAGEMENT REGULATION.

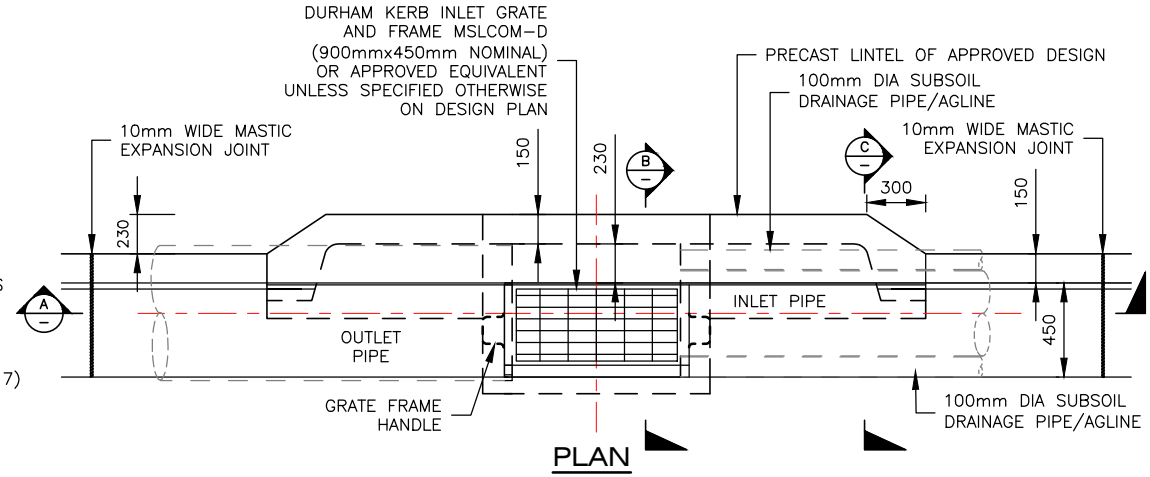

AMENDMENTS			
No.	DETAIL	DATE	CHECKED

DESIGNED / DRAWN Date:
DESIGN CHECKED & APPROVED Date:
MANAGER CAPITAL PROJECTS Date:

Scale: N.T.S. **FINAL**

ASSET OWNER Date:
GROUP MANAGER CITY ASSETS & ENVIRONMENT Date:

CITY OF PARRAMATTA COUNCIL

GRATED SAG PIT
USING PRECAST LINTEL

PLAN, SECTIONS AND NOTES

PLAN N° DS24
Sheet No : 1 of 1
Revision :

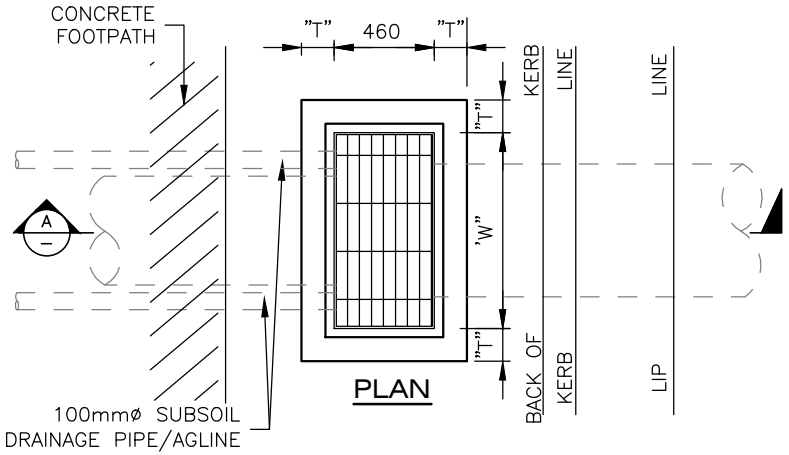

PLAN

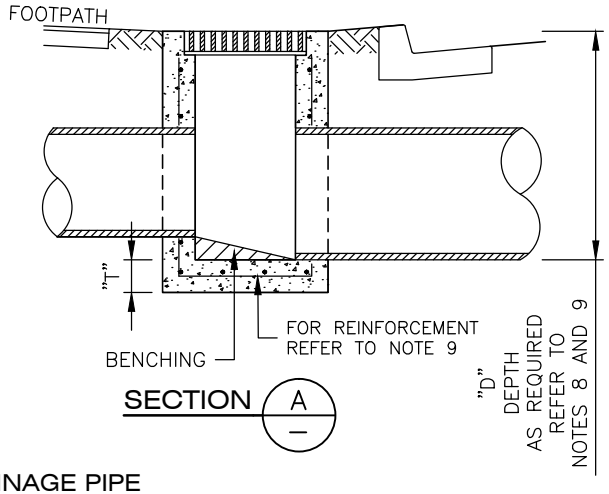

SECTION A

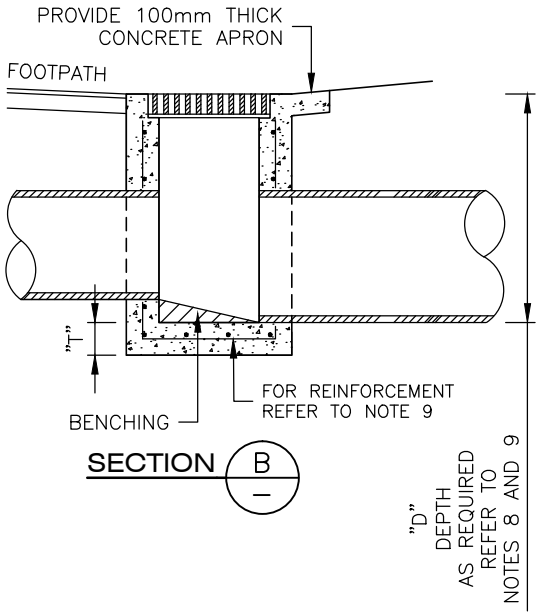

SECTION B

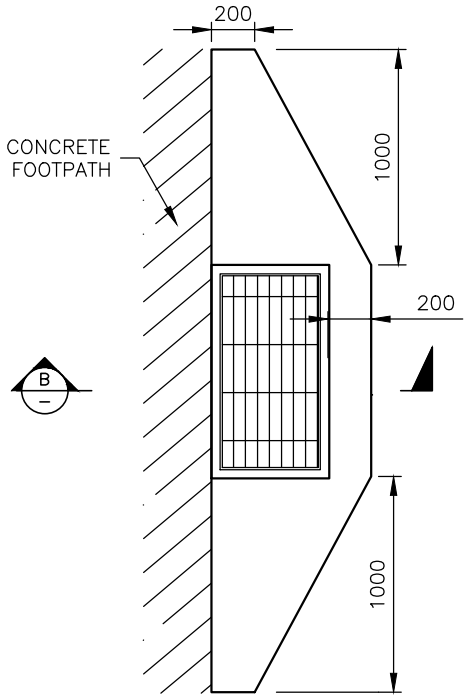

PLAN (WITH APRON)

SUBSOIL DRAINAGE PIPE

100mm DIA. SUBSOIL DRAINAGE PIPE/AGLINE 3.0m LONG WRAPPED IN FABRIC SOCK TO BE PLACED ADJACENT TO INLET PIPES ON BOTH SIDES AND 100mm MINIMUM ABOVE PIT FLOOR. SURROUND SUBSOIL DRAINAGE PIPE/AGLINE WITH 10mm AGGREGATE.

PIT GRATE AND FRAME

- PIT GRATE AND FRAME ARE TO BE DURHAM DRAINAGE PRODUCTS OR APPROVED EQUIVALENT AND COMPLY TO AS 3996:2019.
- CLASS OF GRATE AND FRAME ARE TO BE
  - CLASS "D" FOR ROAD WAY
  - CLASS "C" ELSEWHERE
- HEEL PROOF GRATE AND FRAME WITH RELEVANT CLASS ARE TO BE USED AS SPECIFIED ON THE DESIGN AND WHERE USED IN HIGH PEDESTRIAN AREAS.

WARNING

IN THE LIKELIHOOD THAT ASBESTOS OR OTHER CONTAMINATED CONTAINING MATERIALS MAY BE PRESENT, EXERCISE APPROPRIATE CAUTION AND TREAT IN ACCORDANCE WITH WHS REGULATIONS AND THE EPA CONTAMINATED LAND MANAGEMENT REGULATION.

NOTES

1. SURFACE INLET PITS ARE TO BE CONSTRUCTED AS PER DESIGN.
2. CONCRETE APRONS ARE REQUIRED WHEN CONSTRUCTING ADJACENT TO CONCRETE FOOTPATHS.
3. MINIMUM COVER TO ALL PIPES TO BE 600mm UNDER ROADS AND 450mm ELSEWHERE.
4. ALL PIPES TO BE LAID SO THAT THEIR CENTRELINES INTERSECT AT THE CENTRE OF THE PIT.
5. PITS DEEPER THAN 2500mm TO BE DESIGNED AND CERTIFIED BY A QUALIFIED EXPERIENCED PRACTICING STRUCTURAL ENGINEER. (PRECAST OR CAST IN-SITU)
6. PRECAST PITS CAN BE USED ONLY IF THEY ARE CONSISTENT WITH COUNCIL'S MINIMUM REQUIREMENTS AS SHOWN ON COUNCIL'S STANDARD DRAWINGS AND IN ACCORDANCE WITH MANUFACTURERS SPECIFICATIONS AND AT THE DIRECTION OF THE SUPERINTENDENT.
7. ALL INTERNAL PIT CORNERS TO BE PROVIDED WITH BENCHING TO IMPROVE FLOW.
8. STEP IRONS TO BE PROVIDED AT 300mm CENTRES FOR PITS GREATER THAN 1200mm DEEP AND PLACED ON A WALL CLEAR OF FLOW WHERE POSSIBLE IN ACCORDANCE WITH AS 1657:2018. REFER TO COUNCIL STANDARD DS19.
9. WHERE INTERNAL WIDTH EXCEEDS 750mm OR DEPTH EXCEEDS 1200mm WALLS TO BE REINFORCED. PROVIDE N16 REINFORCEMENT AT 250mm CENTRE/CENTRE BOTH WAYS OR MESH SL72 CENTRALLY PLACED.
10. MINIMUM WALL AND BASE THICKNESS MUST BE 150mm ("T") AND WHERE PIT DEPTH EXCEEDS 1200mm TO BE 200mm ("T") OR AS SPECIFIED IN THE DESIGN.
11. MINIMUM WIDTH OF "W" SHOULD BE OD (OUTER DIAMETER) OF LARGER PIPE + 200mm.
12. CONCRETE TO BE A MINIMUM OF N32 IN ACCORDANCE WITH AS 1012, AS 1379-2007 (R2017) AND AS 3600:2018.
13. SELECTED GRANULAR MATERIAL BACKFILL SHALL BE PLACED TO FILL ALL EXCAVATED VOIDS. REFER TO AS / NZS 3725:2007.
14. ALL DIMENSIONS ARE IN MILLIMETRES UNLESS OTHERWISE SHOWN.

AMENDMENTS			
No.	DETAIL	DATE	CHECKED

DESIGNED / DRAWN Date:

DESIGN CHECKED & APPROVED Date:

MANAGER CAPITAL PROJECTS Date:

Scale: N.T.S. **FINAL**

ASSET OWNER Date:

GROUP MANAGER CITY ASSETS & ENVIRONMENT Date:

CITY OF PARRAMATTA COUNCIL

SURFACE INLET PIT
FOR FOOTPATHS

PLAN, SECTION, DETAIL AND NOTES

PLAN N° DS25

Sheet No : 1 of 2

Revision :

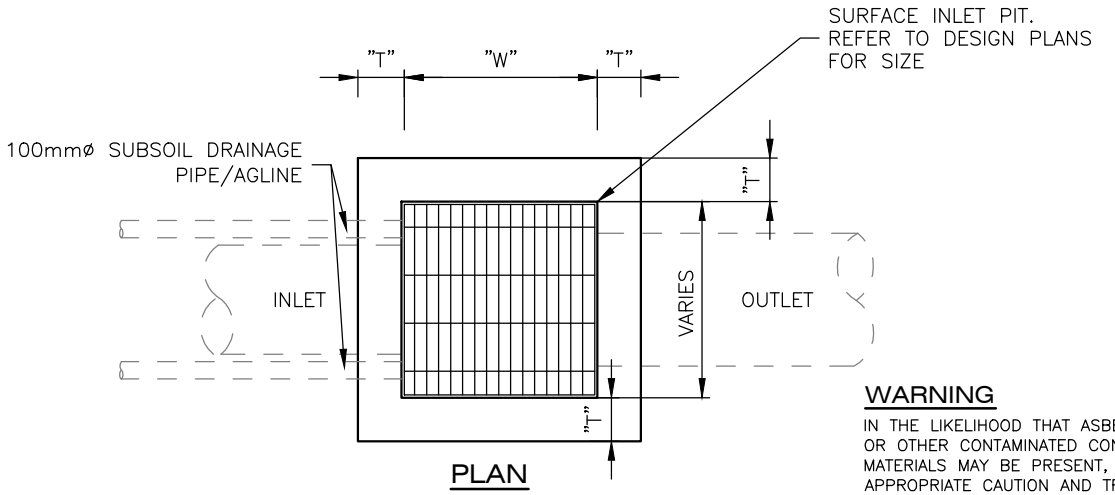

PLAN

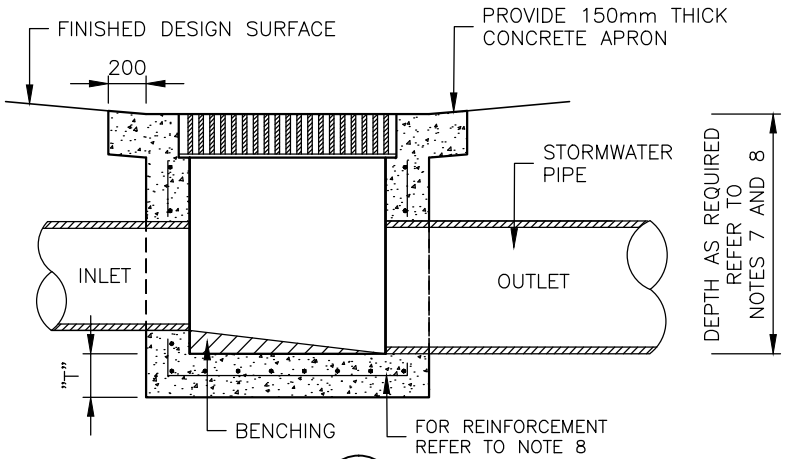

SECTION A

SUBSOIL DRAINAGE PIPE

100mm DIA. SUBSOIL DRAINAGE PIPE/AGLINE 3.0m LONG WRAPPED IN FABRIC SOCK TO BE PLACED ADJACENT TO INLET PIPES ON BOTH SIDES AND 100mm MINIMUM ABOVE PIT FLOOR. SURROUND SUBSOIL DRAINAGE PIPE/AGLINE WITH 10mm AGGREGATE.

PIT GRATE AND FRAME

- PIT GRATE AND FRAME ARE TO BE DURHAM DRAINAGE PRODUCTS OR APPROVED EQUIVALENT AND COMPLY TO AS 3996:2019.
- CLASS OF GRATE AND FRAME ARE TO BE
  CLASS "D" FOR ROAD WAY
  CLASS "C" ELSEWHERE
- HEEL PROOF GRATE AND FRAME WITH RELEVANT CLASS ARE TO BE USED AS SPECIFIED ON THE DESIGN AND WHERE USED IN HIGH PEDESTRIAN AREAS.

WARNING

IN THE LIKELIHOOD THAT ASBESTOS OR OTHER CONTAMINATED CONTAINING MATERIALS MAY BE PRESENT, EXERCISE APPROPRIATE CAUTION AND TREAT IN ACCORDANCE WITH WHS REGULATIONS AND THE EPA CONTAMINATED LAND MANAGEMENT REGULATION.

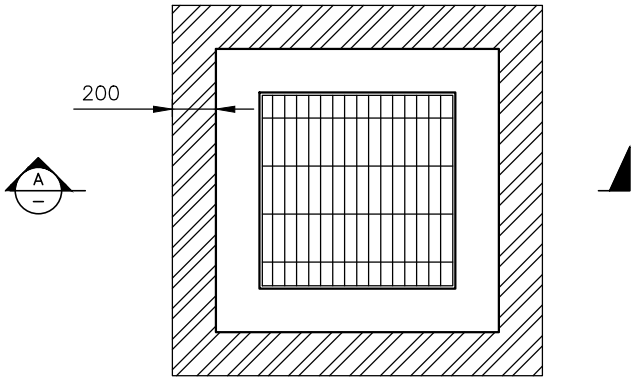

APRON DETAIL

NOTES

1. MINIMUM COVER TO ALL PIPES TO BE 600mm UNDER ROADS AND 450mm ELSEWHERE.
2. ALL PIPES TO BE LAID SO THAT THEIR CENTRELINES INTERSECT AT THE CENTRE OF THE PIT.
3. PITS DEEPER THAN 2500mm TO BE DESIGNED AND CERTIFIED BY A QUALIFIED EXPERIENCED PRACTICING STRUCTURAL ENGINEER. (PRECAST OR CAST IN–SITU)
4. PRECAST PITS CAN BE USED ONLY IF THEY ARE CONSISTENT WITH COUNCIL'S MINIMUM REQUIREMENTS AS SHOWN ON COUNCIL'S STANDARD DRAWINGS AND IN ACCORDANCE WITH MANUFACTURERS SPECIFICATIONS AND AT THE DIRECTION OF THE SUPERINTENDENT.
5. CONCRETE APRONS ARE REQUIRED WHEN CONSTRUCTING ADJACENT TO CONCRETE FOOTPATHS.
6. ALL INTERNAL PIT CORNERS TO BE PROVIDED WITH BENCHING TO IMPROVE FLOW.
7. STEP IRONS TO BE PROVIDED AT 300mm CENTRES FOR PITS GREATER THAN 1200mm DEEP AND PLACED ON A WALL CLEAR OF FLOW WHERE POSSIBLE IN ACCORDANCE WITH AS 1657:2018. REFER TO COUNCIL STANDARD DS19.
8. WHERE INTERNAL WIDTH EXCEEDS 750mm OR DEPTH EXCEEDS 1200mm WALLS TO BE REINFORCED. PROVIDE N16 REINFORCEMENT AT 250mm CENTRE/CENTRE BOTH WAYS OR MESH SL72 CENTRALLY PLACED.
9. MINIMUM WALL AND BASE THICKNESS MUST BE 150mm ("T") AND WHERE PIT DEPTH EXCEEDS 1200mm TO BE 200mm ("T") OR AS SPECIFIED IN THE DESIGN.
10. MINIMUM WIDTH OF "W" SHOULD BE OD (OUTER DIAMETER) OF LARGER PIPE + 200mm.
11. CONCRETE TO BE A MINIMUM OF N32 IN ACCORDANCE WITH AS 1012, AS 1379–2007 (R2017) AND AS 3600:2018.
12. SELECTED GRANULAR MATERIAL BACKFILL SHALL BE PLACED TO FILL ALL EXCAVATED VOIDS. REFER TO AS / NZS 3725:2007.
13. ALL DIMENSIONS ARE IN MILLIMETRES UNLESS OTHERWISE SHOWN.

AMENDMENTS			
No.	DETAIL	DATE	CHECKED

DESIGNED / DRAWN Date:
DESIGN CHECKED & APPROVED Date:
MANAGER CAPITAL PROJECTS Date:

Scale: N.T.S. **FINAL**
ASSET OWNER Date:
GROUP MANAGER CITY ASSETS & ENVIRONMENT Date:

CITY OF PARRAMATTA COUNCIL

SURFACE INLET PIT
GENERAL PURPOSE

PLAN, SECTION, DETAIL AND NOTES

PLAN N° DS25
Sheet No : 2 of 2
Revision :

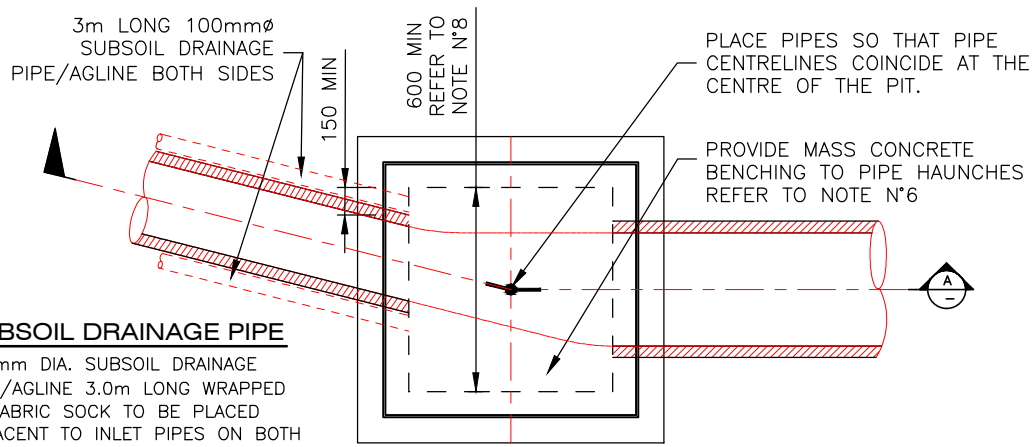

PLAN

SUBSOIL DRAINAGE PIPE

100mm DIA. SUBSOIL DRAINAGE PIPE/AGLINE 3.0m LONG WRAPPED IN FABRIC SOCK TO BE PLACED ADJACENT TO INLET PIPES ON BOTH SIDES AND 100mm MINIMUM ABOVE PIT FLOOR. SURROUND SUBSOIL DRAINAGE PIPE/AGLINE WITH 10mm AGGREGATE.

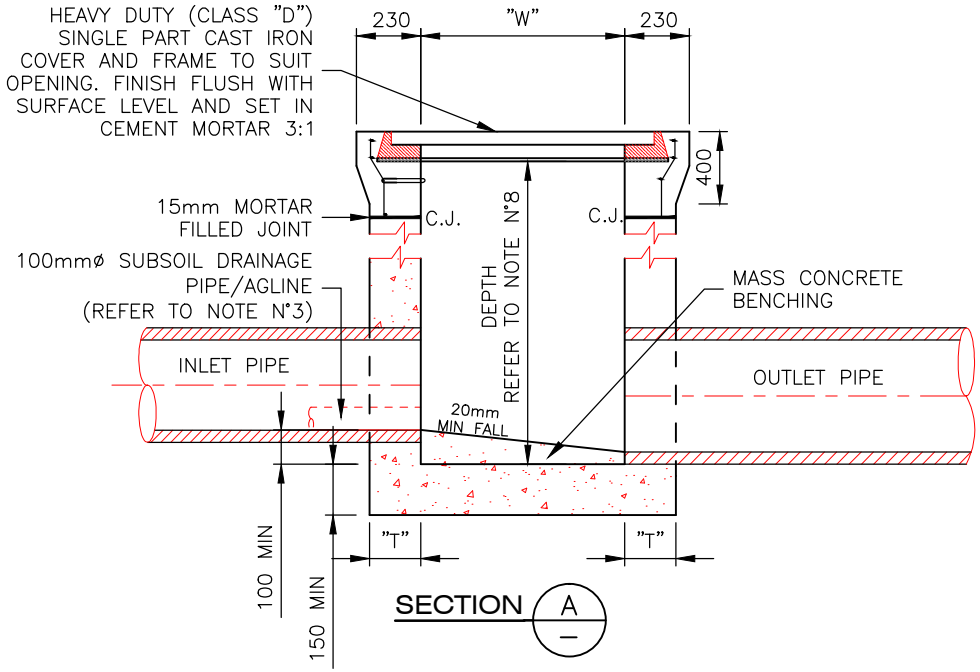

SECTION A –

NOTES

1. MINIMUM COVER TO ALL PIPES TO BE 600mm UNDER ROADS AND 450mm ELSEWHERE.
2. ALL PIPES TO BE LAID SO THAT THEIR CENTRELINES INTERSECT AT THE CENTRE OF THE PIT.
3. PITS DEEPER THAN 2500mm TO BE DESIGNED AND CERTIFIED BY A QUALIFIED EXPERIENCED PRACTICING STRUCTURAL ENGINEER. (PRECAST OR CAST IN–SITU)
4. PRECAST PITS CAN BE USED ONLY IF THEY ARE CONSISTENT WITH COUNCIL'S MINIMUM REQUIREMENTS AS SHOWN ON COUNCIL'S STANDARD DRAWINGS AND IN ACCORDANCE WITH MANUFACTURERS SPECIFICATIONS AND AT THE DIRECTION OF THE SUPERINTENDENT.
5. THE INLET PIPE IS TO BE NO HIGHER THAN THE OUTLET PIPE OBVERT.
6. PROVIDE CONCRETE BENCHING ACROSS PIT TO SUIT INLET AND OUTLET PIPES AS DETAILED.
7. STEP IRONS TO BE PROVIDED AT 300mm CENTRES FOR PITS GREATER THAN 1200mm DEEP AND PLACED ON A WALL CLEAR OF FLOW WHERE POSSIBLE IN ACCORDANCE WITH AS 1657:2018. REFER TO COUNCIL STANDARD DS19.
8. MINIMUM INTERNAL DIMENSIONS: 600mmx600mm FOR DEPTH LESS THAN 800 OR 900mmx600mm FOR DEPTH OF 800mm TO 1200mm. WHERE INTERNAL WIDTH EXCEEDS 750mm OR DEPTH EXCEEDS 1200mm WALLS TO BE REINFORCED. PROVIDE N16 REINFORCEMENT AT 250mm CENTRE/CENTRE BOTH WAYS OR MESH SL72 CENTRALLY PLACED.
9. MINIMUM WALL AND BASE THICKNESS MUST BE 150mm ("T") AND WHERE PIT DEPTH EXCEEDS 1200mm TO BE 200mm ("T") OR AS SPECIFIED IN THE DESIGN.
10. MINIMUM WIDTH OF "W" SHOULD BE OD (OUTER DIAMETER) OF LARGER PIPE + 200mm.
11. CONCRETE TO BE A MINIMUM OF N32 IN ACCORDANCE WITH AS 1012, AS 1379–2007 (R2107) AND AS 3600:2018.
12. SELECTED GRANULAR MATERIAL BACKFILL SHALL BE PLACED TO FILL ALL EXCAVATED VOIDS. REFER TO AS / NZS 3725:2007.
13. ALL DIMENSIONS ARE IN MILLIMETRES UNLESS OTHERWISE SHOWN.

PIT GRATE AND FRAME

PIT GRATE AND FRAME ARE TO BE DURHAM DRAINAGE PRODUCTS OR APPROVED EQUIVALENT AND COMPLY TO AS 3996:2019.

- CLASS OF GRATE AND FRAME ARE TO BE
  CLASS "D" FOR ROAD WAY
  CLASS "C" ELSEWHERE
- HEEL PROOF GRATE AND FRAME WITH RELEVANT CLASS ARE TO BE USED AS SPECIFIED ON THE DESIGN AND WHERE USED IN HIGH PEDESTRIAN AREAS.

WARNING

IN THE LIKELIHOOD THAT ASBESTOS OR OTHER CONTAMINATED CONTAINING MATERIALS MAY BE PRESENT, EXERCISE APPROPRIATE CAUTION AND TREAT IN ACCORDANCE WITH WHS REGULATIONS AND THE EPA CONTAMINATED LAND MANAGEMENT REGULATION.

AMENDMENTS			
No.	DETAIL	DATE	CHECKED

DESIGNED / DRAWN Date:
DESIGN CHECKED & APPROVED Date:
MANAGER CAPITAL PROJECTS Date:

Scale: N.T.S.
FINAL
ASSET OWNER Date:
GROUP MANAGER CITY ASSETS & ENVIRONMENT Date:

CITY OF PARRAMATTA COUNCIL

JUNCTION PIT

PLAN, SECTION AND NOTES

PLAN N° DS26

Sheet No : 1 of 2

Revision :

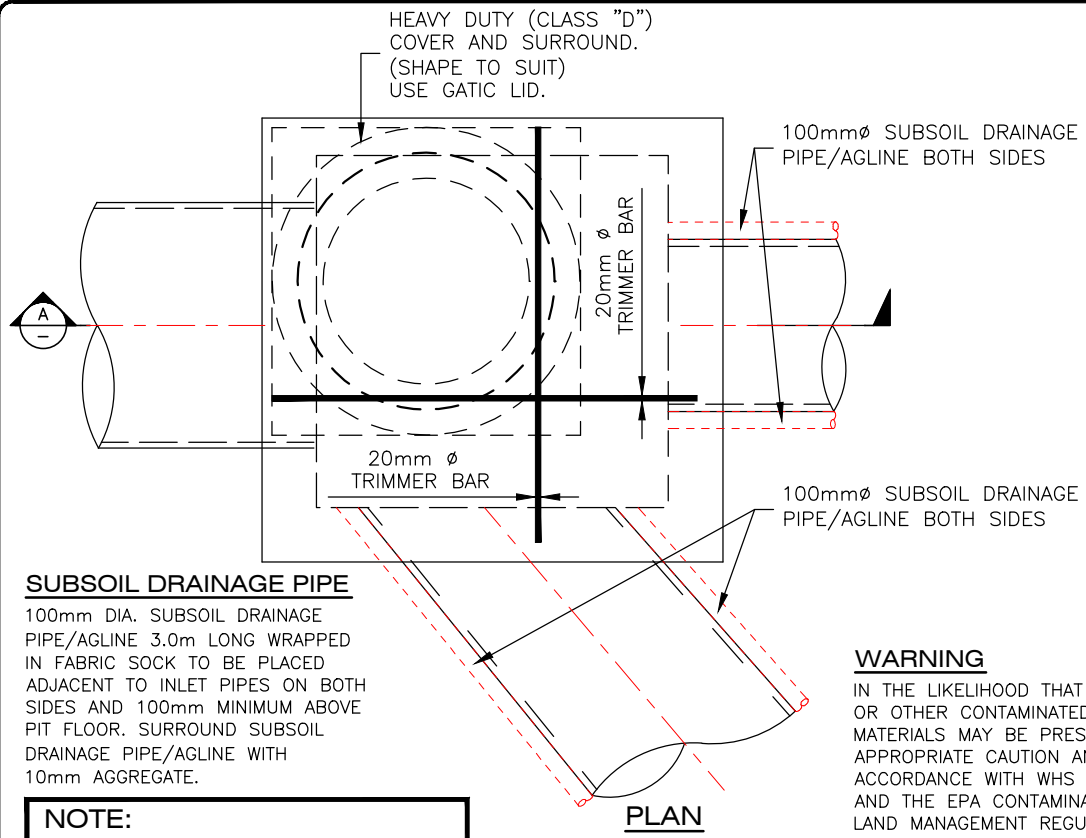

PLAN

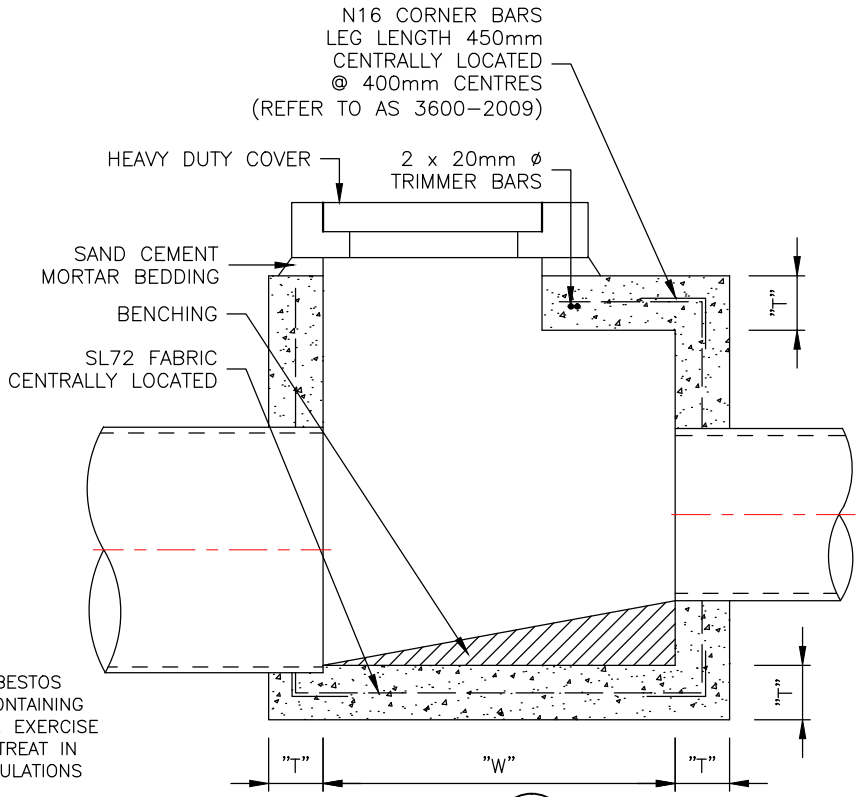

SECTION A –

SUBSOIL DRAINAGE PIPE

100mm DIA. SUBSOIL DRAINAGE PIPE/AGLINE 3.0m LONG WRAPPED IN FABRIC SOCK TO BE PLACED ADJACENT TO INLET PIPES ON BOTH SIDES AND 100mm MINIMUM ABOVE PIT FLOOR. SURROUND SUBSOIL DRAINAGE PIPE/AGLINE WITH 10mm AGGREGATE.

NOTE:
ONLY TO BE USED FOR PITS DEEPER THAN 1200mm

WARNING

IN THE LIKELIHOOD THAT ASBESTOS OR OTHER CONTAMINATED CONTAINING MATERIALS MAY BE PRESENT, EXERCISE APPROPRIATE CAUTION AND TREAT IN ACCORDANCE WITH WHS REGULATIONS AND THE EPA CONTAMINATED LAND MANAGEMENT REGULATION.

NOTES

1. MINIMUM COVER TO ALL PIPES TO BE 600mm UNDER ROADS AND 450mm ELSEWHERE.
2. ALL PIPES TO BE LAID SO THAT THEIR CENTRELINES INTERSECT AT THE CENTRE OF THE PIT.
3. PITS DEEPER THAN 2500mm TO BE DESIGNED AND CERTIFIED BY A QUALIFIED EXPERIENCED PRACTICING STRUCTURAL ENGINEER. (PRECAST OR CAST IN–SITU)
4. PRECAST PITS CAN BE USED ONLY IF THEY ARE CONSISTENT WITH COUNCIL'S MINIMUM REQUIREMENTS AS SHOWN ON COUNCIL'S STANDARD DRAWINGS AND IN ACCORDANCE WITH MANUFACTURERS SPECIFICATIONS AND AT THE DIRECTION OF THE SUPERINTENDENT.
5. PROVIDE CONCRETE BENCHING ACROSS PIT TO SUIT INLET AND OUTLET PIPES AS DETAILED.
6. STEP IRONS TO BE PROVIDED AT 300mm CENTRES FOR PITS GREATER THAN 1200mm DEEP AND PLACED ON A WALL CLEAR OF FLOW WHERE POSSIBLE IN ACCORDANCE WITH AS 1657:2018. REFER TO COUNCIL STANDARD DS19.
7. WHERE INTERNAL WIDTH EXCEEDS 750mm OR DEPTH EXCEEDS 1200mm WALLS TO BE REINFORCED. PROVIDE N16 REINFORCEMENT AT 250mm CENTRE/CENTRE BOTH WAYS OR MESH SL72 CENTRALLY PLACED.
8. MINIMUM WALL AND BASE THICKNESS MUST BE 150mm ("T") AND WHERE PIT DEPTH EXCEEDS 1200mm TO BE 200mm ("T") OR AS SPECIFIED IN THE DESIGN.
9. MINIMUM WIDTH OF "W" SHOULD BE OD (OUTER DIAMETER) OF LARGER PIPE + 200mm.
10. CONCRETE TO BE A MINIMUM BE OF N32 IN ACCORDANCE WITH AS 1012, AS 1379–2007 (R2017) AND AS 3600:2018.
11. SELECTED GRANULAR MATERIAL BACKFILL SHALL BE PLACED TO FILL ALL EXCAVATED VOIDS. REFER TO AS / NZS 3725:2007.
12. ALL DIMENSIONS ARE IN MILLIMETRES UNLESS OTHERWISE SHOWN.

AMENDMENTS			
No.	DETAIL	DATE	CHECKED

DESIGNED / DRAWN Date:
DESIGN CHECKED & APPROVED Date:
MANAGER CAPITAL PROJECTS Date:

Scale: N.T.S.
FINAL
ASSET OWNER Date:
GROUP MANAGER CITY ASSETS & ENVIRONMENT Date:

CITY OF PARRAMATTA COUNCIL

HEAVY DUTY JUNCTION PIT

PLAN, SECTION AND NOTES

PLAN N° DS26
Sheet No : 2 of 2
Revision :

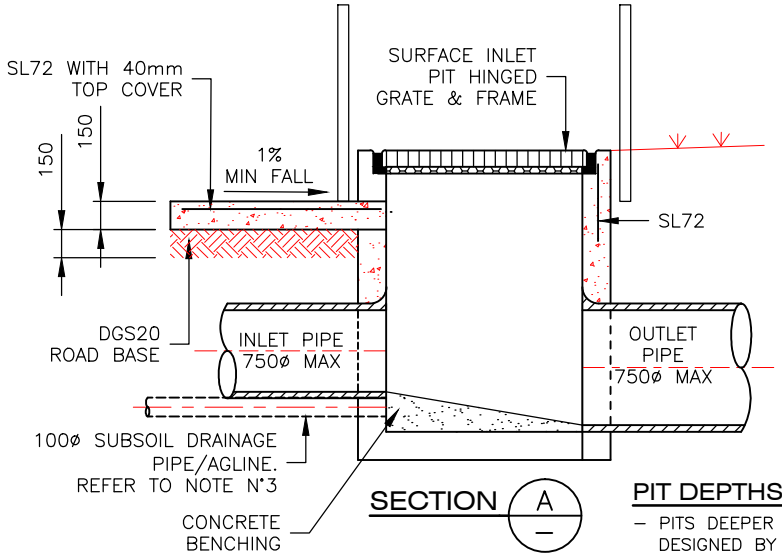

SECTION A

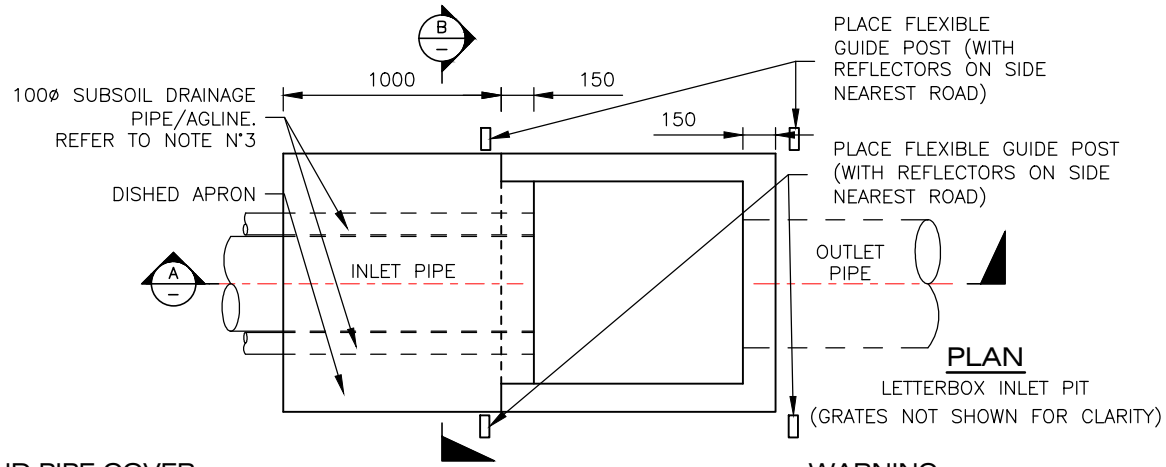

PLAN

LETTERBOX INLET PIT

(GRATES NOT SHOWN FOR CLARITY)

PIT DEPTHS AND PIPE COVER

- PITS DEEPER THAN 2500mm TO BE DESIGNED BY A QUALIFIED EXPERIENCED STRUCTURAL ENGINEER. (PRECAST OR CAST IN-SITU)
- MINIMUM COVER TO ALL PIPES TO BE 600mm UNDER ROADS AND 450mm ELSEWHERE

NOTE:
SUBJECT TO APPROVAL BY COUNCIL PRIOR TO USE

WARNING

IN THE LIKELIHOOD THAT ASBESTOS OR OTHER CONTAMINATED CONTAINING MATERIALS MAY BE PRESENT, EXERCISE APPROPRIATE CAUTION AND TREAT IN ACCORDANCE WITH WHS REGULATIONS AND THE EPA CONTAMINATED LAND MANAGEMENT REGULATION.

GUIDE POSTS

GUIDE POSTS TO BE HEAVY DUTY FLEXIBLE PVC, WHITE WITH REFLECTORS BOTH SIDES

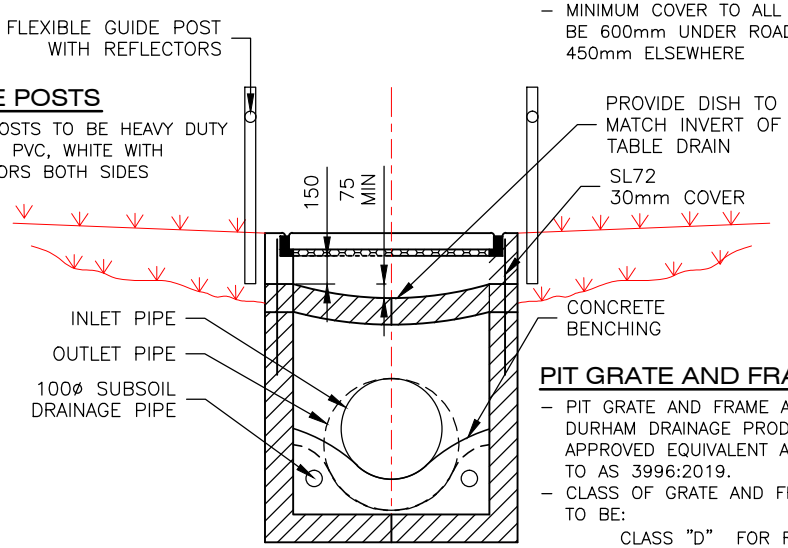

SECTION B

PIT GRATE AND FRAME

- PIT GRATE AND FRAME ARE TO BE DURHAM DRAINAGE PRODUCTS OR APPROVED EQUIVALENT AND COMPLY TO AS 3996:2019.
- CLASS OF GRATE AND FRAME ARE TO BE:
  CLASS "D" FOR ROAD WAY
  CLASS "C" ELSEWHERE
- GRATE AND FRAME TO BE "MEDIUM/HEAVY" TRAFFICABLE BIKE SAFE.

MINIMUM PIT SIZES

600mmx600mm FOR PITS LESS THAN 600mm DEPTH
900mmx600mm FOR PITS 600mm TO 1200mm DEPTH
900mmx900mm FOR PITS GREATER THAN 1200mm DEPTH

NOTES

1. CONCRETE TO BE A MINIMUM OF N32 IN ACCORDANCE WITH AS 1012, AS 1379-2007 (R2017) AND AS 3600:2108.
2. PROVIDE CONCRETE BENCHING ACROSS PIT TO SUIT INLET AND OUTLET PIPES AS DETAILED.
3. WHERE DIRECTED PROVIDE 100mm DIA SUBSOIL DRAINAGE PIPE 3.0m LONG WRAPPED IN FABRIC SOCK TO BE PLACED ADJACENT TO INLET PIPES ON BOTH SIDES AND 100mm MINIMUM ABOVE PIT FLOOR. SURROUND SUBSOIL DRAINAGE PIPE/AGLINE WITH 10mm AGGREGATE.
4. STEP IRONS TO BE PROVIDED AT 300mm CENTRES FOR PITS GREATER THAN 1200mm DEEP AND PLACED ON A WALL CLEAR OF FLOW WHERE POSSIBLE IN ACCORDANCE WITH AS 1657:2018. REFER TO COUNCIL STANDARD DRAWING DS19.
5. SELECTED GRANULAR MATERIAL BACK FILL SHALL BE PLACED TO FILL ALL EXCAVATED VOIDS. (REFER TO AS / NZS 3725:2007)
6. PRE-CAST PITS CAN BE USED ONLY IF THEY ARE CONSISTENT WITH COUNCIL'S STANDARD DRAWINGS AND IN ACCORDANCE WITH MANUFACTURERS SPECIFICATION AND TO THE DIRECTION OF THE SUPERINTENDENT.
7. THE INLET PIPE OBVERT IS TO BE NO HIGHER THAN THE OUTLET PIPE OBVERT.
8. WHERE INTERNAL WIDTH EXCEEDS 750mm OR DEPTH EXCEEDS 1200mm WALLS TO BE REINFORCED. PROVIDE N16 REINFORCEMENT AT 250mm CENTRE/CENTRE BOTH WAYS OR MESH SL72 CENTRALLY PLACED.
9. MINIMUM WALL AND BASE THICKNESS MUST BE 150mm ("T") AND WHERE PIT DEPTH EXCEEDS 1200mm TO BE 200mm ("T") OR AS SPECIFIED ON DESIGN.
10. MINIMUM WIDTH OF "W" SHOULD BE OD (OUTER DIAMETER) OF LARGER PIPE +200mm
11. DIMENSIONS ARE IN MILLIMETRES UNLESS OTHERWISE SHOWN.

AMENDMENTS			
No.	DETAIL	DATE	CHECKED

DESIGNED / DRAWN Date:
DESIGN CHECKED & APPROVED Date:
MANAGER CAPITAL PROJECTS Date:

Scale: N.T.S. **FINAL**
ASSET OWNER Date:
GROUP MANAGER CITY ASSETS & ENVIRONMENT Date:

CITY OF PARRAMATTA COUNCIL

STANDARD LETTERBOX INLET PIT

PLAN, SECTIONS AND NOTES

PLAN N° DS27

Sheet No : 1 of 3

Revision :

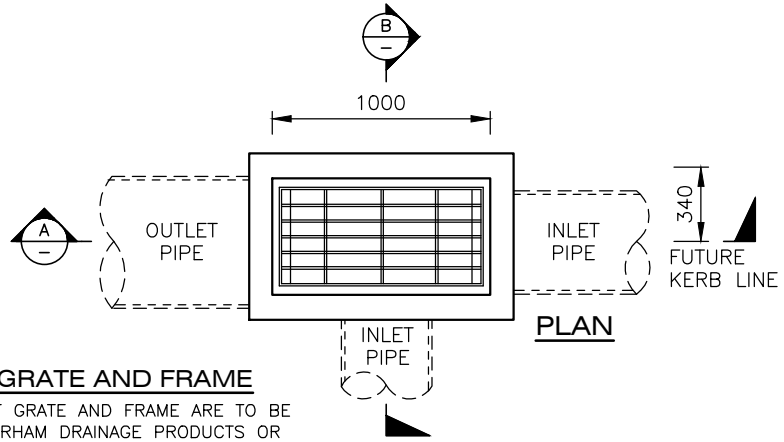

PLAN

PIT GRATE AND FRAME

- PIT GRATE AND FRAME ARE TO BE DURHAM DRAINAGE PRODUCTS OR APPROVED EQUIVALENT AND COMPLY TO AS 3996:2019.
- CLASS OF GRATE AND FRAME ARE TO BE:
  CLASS "D" FOR ROAD WAY
  CLASS "C" ELSEWHERE
- GRATE AND FRAME TO BE "MEDIUM/HEAVY" TRAFFICABLE BIKE SAFE.

NOTE:
SUBJECT TO APPROVAL BY COUNCIL PRIOR TO USE

SUBSOIL DRAINAGE PIPE

WHERE DIRECTED PROVIDE 100mm DIA. SUBSOIL DRAINAGE PIPE/AGLINE 3.0m LONG WRAPPED IN FABRIC SOCK TO BE PLACED ADJACENT TO INLET PIPES ON BOTH SIDES AND 100mm MINIMUM ABOVE PIT FLOOR. SURROUND SUBSOIL DRAINAGE PIPE/AGLINE WITH 10mm AGGREGATE.

PIT DEPTHS AND PIPE COVER

- PITS DEEPER THAN 2500mm TO BE DESIGNED BY A QUALIFIED EXPERIENCED STRUCTURAL ENGINEER. (PRECAST OR CAST IN-SITU)
- MINIMUM COVER TO ALL PIPES TO BE 600mm UNDER ROADS AND 450mm ELSEWHERE

WARNING

IN THE LIKELIHOOD THAT ASBESTOS OR OTHER CONTAMINATED CONTAINING MATERIALS MAY BE PRESENT, EXERCISE APPROPRIATE CAUTION AND TREAT IN ACCORDANCE WITH WHS REGULATIONS AND THE EPA CONTAMINATED LAND MANAGEMENT REGULATION.

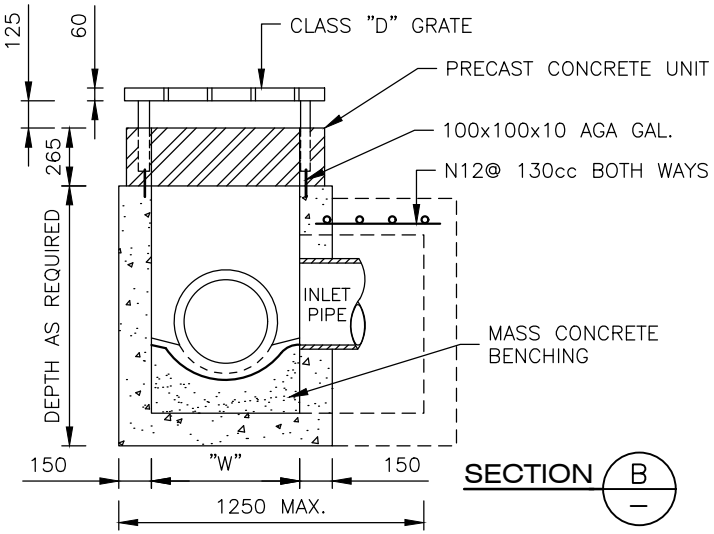

SECTION B

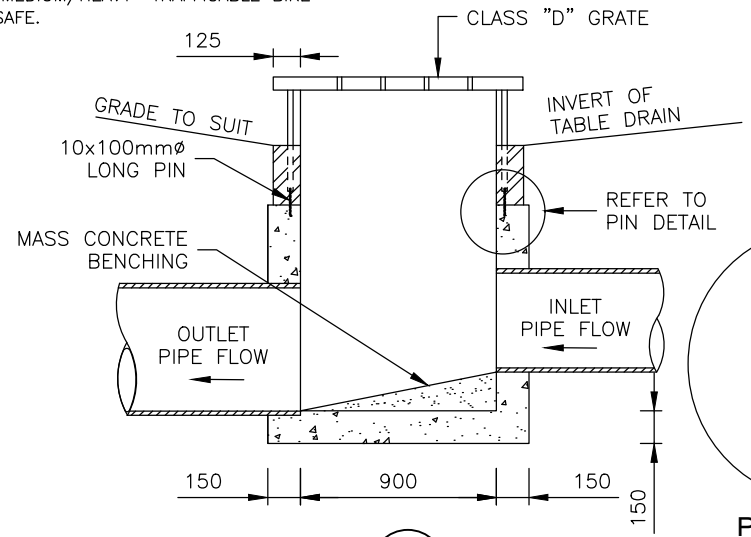

SECTION A

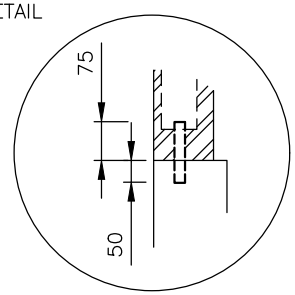

PIN DETAIL

NOTES

1. CONCRETE TO BE A MINIMUM OF N32 IN ACCORDANCE WITH AS 1012, AS 1379-2007 (R2017) AND AS 3600:2018
2. TOP OF BENCHING TO BE ONE-THIRD OF OUTLET PIPE DIAMETER.
3. STEP IRONS TO BE PROVIDED AT 300mm CENTRES FOR PITS GREATER THAN 1200mm DEEP AND PLACED ON A WALL CLEAR OF FLOW WHERE POSSIBLE IN ACCORDANCE WITH AS 1657:2018. REFER TO COUNCIL STANDARD DRAWING DS19.
4. ALL PITS TO BE PROVIDED WITH LOCKING CLIP.
5. WHERE DIRECTED PROVIDE 100mm DIA SUBSOIL DRAINAGE PIPE/AGLINE 3.0m LONG WRAPPED IN FABRIC SOCK PLACED ADJACENT TO INLET PIPES ON BOTH SIDES AND 100mm MINIMUM ABOVE PIT FLOOR. SURROUND SUBSOIL DRAINAGE PIPE/AGLINE WITH 10mm AGGREGATE.
6. PRE-CAST PITS CAN BE USED ONLY IF THEY ARE CONSISTENT WITH COUNCIL'S STANDARD DRAWINGS AND IN ACCORDANCE WITH MANUFACTURERS SPECIFICATIONS AND AT THE DIRECTION OF THE SUPERINTENDENT. USE CAUTION WHEN PLACING AND REMOVING A PRE CAST UNIT.
7. WHERE INTERNAL WIDTH EXCEEDS 750mm OR DEPTH EXCEEDS 1200mm WALLS TO BE REINFORCED. PROVIDE N16 REINFORCEMENT AT 250mm CENTRE/CENTRE BOTH WAYS OR MESH SL72 CENTRALLY PLACED.
8. MINIMUM WALL AND BASE THICKNESS MUST BE 150mm ("T") AND WHERE PIT DEPTH EXCEEDS 1200mm TO BE 200mm ("T") OR AS SPECIFIED ON THE DESIGN.
9. MINIMUM WIDTH OF "W" SHOULD BE OD (OUTER DIAMETER) OF LARGER PIPE +200mm
10. SELECTED GRANULAR MATERIAL BACKFILL SHALL BE PLACED TO FILL ALL EXCAVATED VOIDS. (REFER TO AS / NZS 3725:2007)
11. ALL DIMENSIONS ARE IN MILLIMETRES UNLESS SHOWN OTHERWISE.

AMENDMENTS			
No.	DETAIL	DATE	CHECKED

DESIGNED / DRAWN Date:
DESIGN CHECKED & APPROVED Date:
MANAGER CAPITAL PROJECTS Date:

Scale: N.T.S. **FINAL**
ASSET OWNER Date:
GROUP MANAGER CITY ASSETS & ENVIRONMENT Date:

CITY OF PARRAMATTA COUNCIL

STANDARD LETTERBOX PIT

PLAN, SECTIONS AND NOTES

PLAN N° DS27
Sheet No : 2 of 3
Revision :

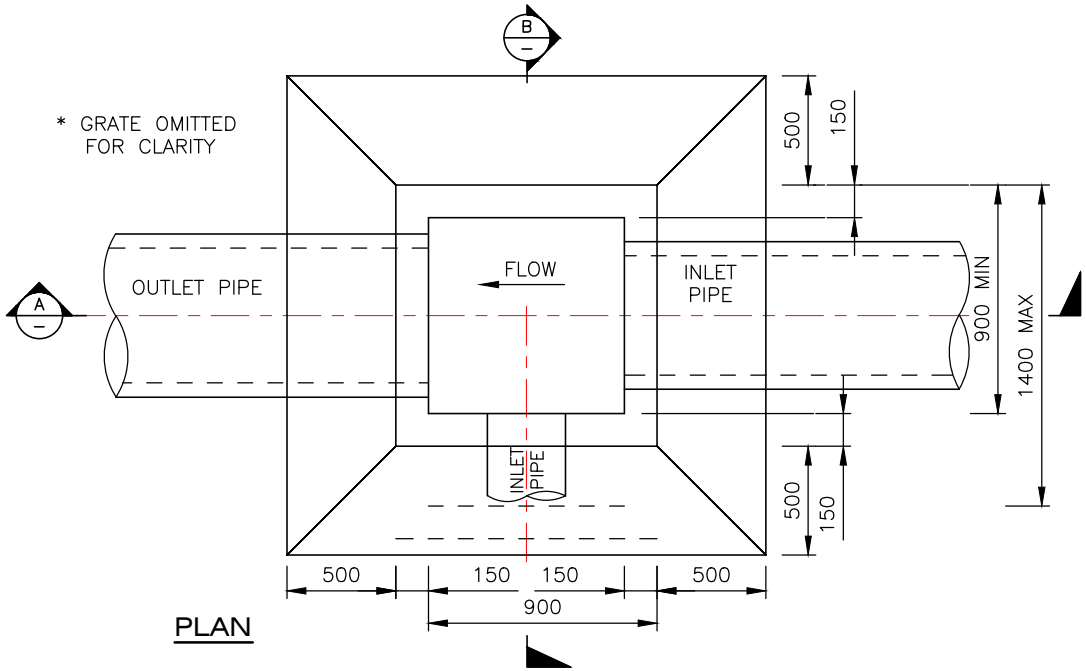

PLAN

NOTES

1. CONCRETE TO BE A MINIMUM OF N32 IN ACCORDANCE WITH AS 1012, AS 1379–2007 (R2017) AND AS 3600:2018
2. TOP OF BENCHING TO BE ONE–THIRD OF OUTLET PIPE DIAMETER.
3. STEP IRONS TO BE PROVIDED AT 300mm CENTRES FOR PITS GREATER THAN 1200mm DEEP AND PLACED ON A WALL CLEAR OF FLOW WHERE POSSIBLE IN ACCORDANCE WITH AS 1657:2018. REFER TO COUNCIL STANDARD DRAWING DS19.
4. ALL PITS TO BE PROVIDED WITH LOCKING CLIP.
5. ALL PIPES TO BE LAID SO THAT THEIR VERTICAL CENTRELINES INTERSECT AT THE CENTRE OF THE PIT.
6. WHERE DIRECTED PROVIDE 100mm DIA SUBSOIL DRAINAGE PIPE/AGLINE 3.0m LONG WRAPPED IN FABRIC SOCK PLACED ADJACENT TO INLET PIPES ON BOTH SIDES AND 100mm MINIMUM ABOVE PIT FLOOR. SURROUND SUBSOIL DRAINAGE PIPE/AGLINE WITH 10mm AGGREGATE.
7. PRE–CAST PITS CAN BE USED ONLY IF THEY ARE CONSISTENT WITH COUNCIL'S STANDARD DRAWINGS AND IN ACCORDANCE WITH MANUFACTURERS SPECIFICATIONS AND AT THE DIRECTION OF THE SUPERINTENDENT. USE CAUTION WHEN PLACING AND REMOVING A PRE CAST UNIT.
8. WHERE INTERNAL WIDTH EXCEEDS 750mm OR DEPTH EXCEEDS 1200mm WALLS TO BE REINFORCED. PROVIDE N16 REINFORCEMENT AT 250mm CENTRE/CENTRE BOTH WAYS OR MESH SL72 CENTRALLY PLACED.
9. MINIMUM WALL AND BASE THICKNESS MUST BE 150mm ("T") AND WHERE PIT DEPTH EXCEEDS 1200mm TO BE 200mm ("T") OR AS SPECIFIED ON THE DESIGN.
10. MINIMUM WIDTH OF "W" SHOULD BE OD (OUTER DIAMETER) OF LARGER PIPE +200mm
11. SELECTED GRANULAR MATERIAL BACKFILL SHALL BE PLACED TO FILL ALL EXCAVATED VOIDS. (REFER TO AS / NZS 3725:2007)
12. ALL DIMENSIONS ARE IN MILLIMETRES UNLESS SHOWN OTHERWISE.

NOTE:
SUBJECT TO APPROVAL BY COUNCIL PRIOR TO USE

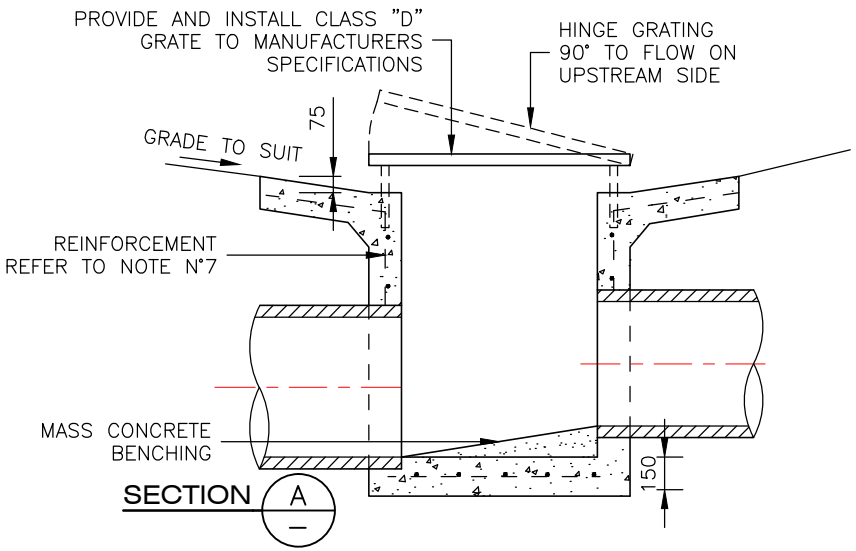

SECTION A

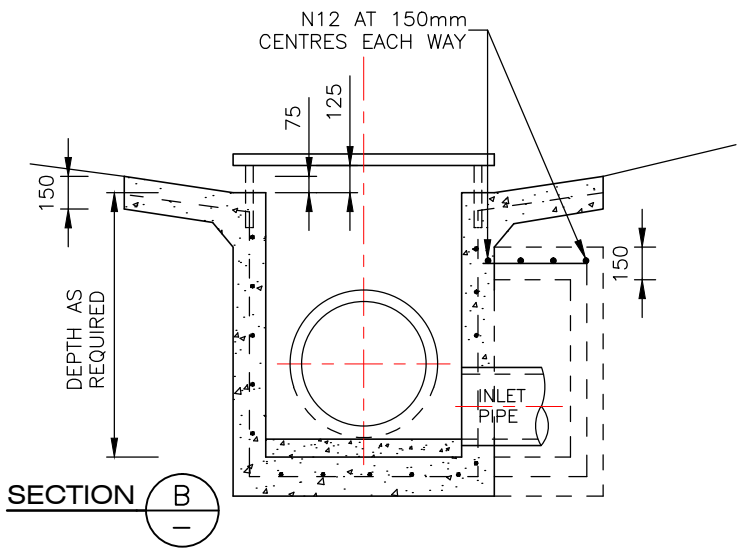

SECTION B

PIT GRATE AND FRAME

- PIT GRATE AND FRAME ARE TO BE DURHAM DRAINAGE PRODUCTS OR APPROVED EQUIVALENT AND COMPLY TO AS 3996:2019.
- CLASS OF GRATE AND FRAME ARE TO BE:
  - CLASS "D" FOR ROAD WAY
  - CLASS "C" ELSEWHERE
- GRATE AND FRAME TO BE "MEDIUM/HEAVY" TRAFFICABLE BIKE SAFE.

PIT DEPTHS AND PIPE COVER

- PITS DEEPER THAN 2500mm TO BE DESIGNED BY A QUALIFIED EXPERIENCED STRUCTURAL ENGINEER. (PRECAST OR CAST IN–SITU)
- MINIMUM COVER TO ALL PIPES TO BE 600mm UNDER ROADS AND 450mm ELSEWHERE

WARNING

IN THE LIKELIHOOD THAT ASBESTOS OR OTHER CONTAMINATED CONTAINING MATERIALS MAY BE PRESENT, EXERCISE APPROPRIATE CAUTION AND TREAT IN ACCORDANCE WITH WHS REGULATIONS AND THE EPA CONTAMINATED LAND MANAGEMENT REGULATION.

AMENDMENTS			
No.	DETAIL	DATE	CHECKED

DESIGNED / DRAWN Date:
DESIGN CHECKED & APPROVED Date:
MANAGER CAPITAL PROJECTS Date:

Scale: N.T.S. **FINAL**
ASSET OWNER Date:
GROUP MANAGER CITY ASSETS & ENVIRONMENT Date:

CITY OF PARRAMATTA COUNCIL

STANDARD LETTERBOX PIT
FOR PIPES UP TO ø 1350

PLAN, SECTIONS AND NOTES

PLAN N° DS27
Sheet No : 3 of 3
Revision :

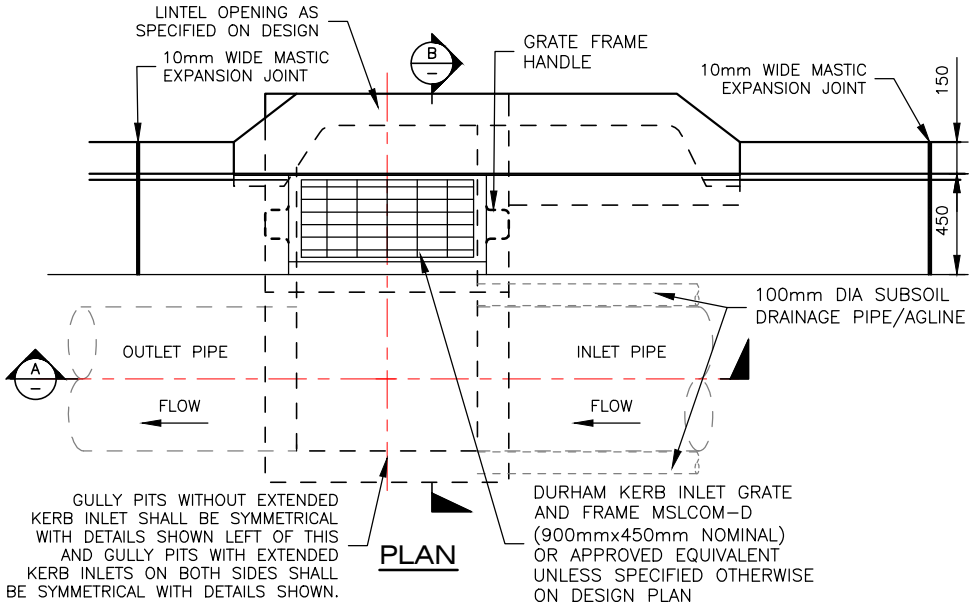

PLAN

NOTES

1. MINIMUM COVER TO ALL PIPES TO BE 600mm UNDER ROADS AND 450mm ELSEWHERE.
2. ALL PIPES TO BE LAID SO THAT THEIR CENTRELINES INTERSECT AT THE CENTRE OF THE PIT.
3. PITS DEEPER THAN 2500mm TO BE DESIGNED AND CERTIFIED BY A QUALIFIED EXPERIENCED PRACTICING STRUCTURAL ENGINEER. (PRECAST OR CAST IN-SITU)
4. PRECAST PITS CAN BE USED ONLY IF THEY ARE CONSISTENT WITH COUNCIL'S MINIMUM REQUIREMENTS AS SHOWN ON COUNCIL'S STANDARD DRAWINGS AND IN ACCORDANCE WITH MANUFACTURERS SPECIFICATIONS AND AT THE DIRECTION OF THE SUPERINTENDENT. USE CAUTION WHEN PLACING AND REMOVING A PRECAST UNIT.
5. ALL PITS SHALL BE PROVIDED WITH AN EXTENDED INLET 900mm LONG ON THE HIGHER SIDE OR ON BOTH SIDES OF PITS IN SAGS UNLESS OTHERWISE SHOWN.
6. PROVIDE CONCRETE BENCHING ACROSS PIT TO SUIT INLET AND OUTLET PIPES AS DETAILED. TOP OF BENCHING TO BE ONE-THIRD OF OUTLET PIPE DIAMETER.
7. STEP IRONS TO BE PROVIDED AT 300mm CENTRES FOR PITS GREATER THAN 1200mm DEEP AND PLACED ON A WALL CLEAR OF FLOW WHERE POSSIBLE IN ACCORDANCE WITH AS 1657:2018. REFER TO COUNCIL STANDARD DRAWING DS19.
8. WHERE INTERNAL WIDTH EXCEEDS 750mm OR DEPTH EXCEEDS 1200mm WALLS TO BE REINFORCED. PROVIDE N16 REINFORCEMENT AT 250mm CENTRE/CENTRE BOTH WAYS OR MESH SL72 CENTRALLY PLACED.
9. MINIMUM WALL AND BASE THICKNESS MUST BE 150mm ("T") AND WHERE PIT DEPTH EXCEEDS 1200mm TO BE 200mm ("T") OR AS SPECIFIED IN THE DESIGN.
10. MINIMUM WIDTH OF "W" SHOULD BE OD (OUTER DIAMETER) OF LARGER PIPE + 200mm.
11. CONCRETE TO BE A MINIMUM OF N32 IN ACCORDANCE WITH AS 1012, AS 1379-2007 (R2017) AND AS 3600:2108
12. SELECTED GRANULAR MATERIAL BACKFILL SHALL BE PLACED TO FILL ALL EXCAVATED VOIDS. REFER TO AS / NZS 3725:2007.
13. ALL DIMENSIONS ARE IN MILLIMETRES UNLESS OTHERWISE SHOWN.

WARNING

IN THE LIKELIHOOD THAT ASBESTOS OR OTHER CONTAMINATED CONTAINING MATERIALS MAY BE PRESENT, EXERCISE APPROPRIATE CAUTION AND TREAT IN ACCORDANCE WITH WHS REGULATIONS AND THE EPA CONTAMINATED LAND MANAGEMENT REGULATION.

SUBSOIL DRAINAGE PIPE

100mm DIA. SUBSOIL DRAINAGE PIPE/AGLINE 3.0m LONG WRAPPED IN FABRIC SOCK TO BE PLACED ADJACENT TO INLET PIPES ON BOTH SIDES AND 100mm MINIMUM ABOVE PIT FLOOR. SURROUND SUBSOIL DRAINAGE PIPE/AGLINE WITH 10mm AGGREGATE.

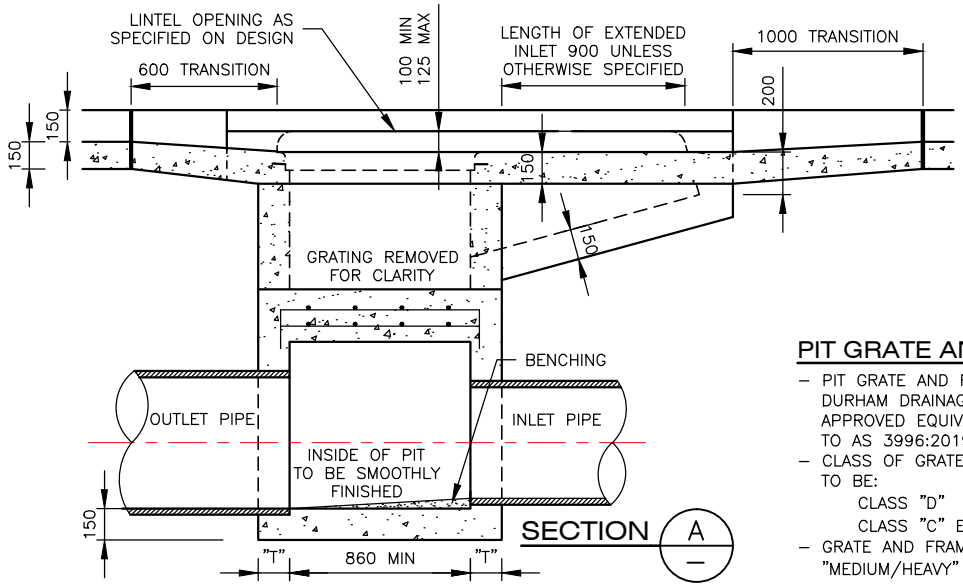

SECTION A

PIT GRATE AND FRAME

- PIT GRATE AND FRAME ARE TO BE DURHAM DRAINAGE PRODUCTS OR APPROVED EQUIVALENT AND COMPLY TO AS 3996:2019.
- CLASS OF GRATE AND FRAME ARE TO BE:
  - CLASS "D" FOR ROAD WAY
  - CLASS "C" ELSEWHERE
- GRATE AND FRAME TO BE "MEDIUM/HEAVY" TRAFFICABLE BIKE SAFE

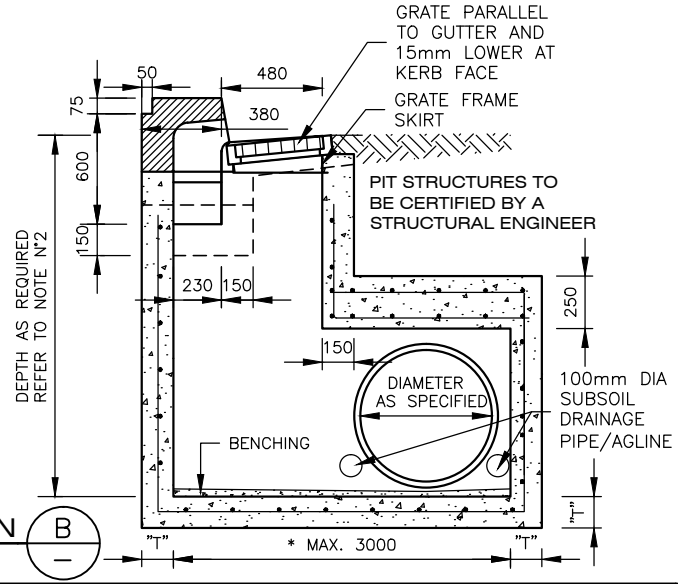

SECTION B

AMENDMENTS			
No.	DETAIL	DATE	CHECKED

DESIGNED / DRAWN Date:

DESIGN CHECKED & APPROVED Date:

MANAGER CAPITAL PROJECTS Date:

Scale: N.T.S. **FINAL**

ASSET OWNER Date:

GROUP MANAGER CITY ASSETS & ENVIRONMENT Date:

CITY OF PARRAMATTA COUNCIL

GULLY PIT
PIPE UNDER ROADWAY

PLAN, SECTIONS, AND NOTES

PLAN N° DS28

Sheet No : 1

Revision :

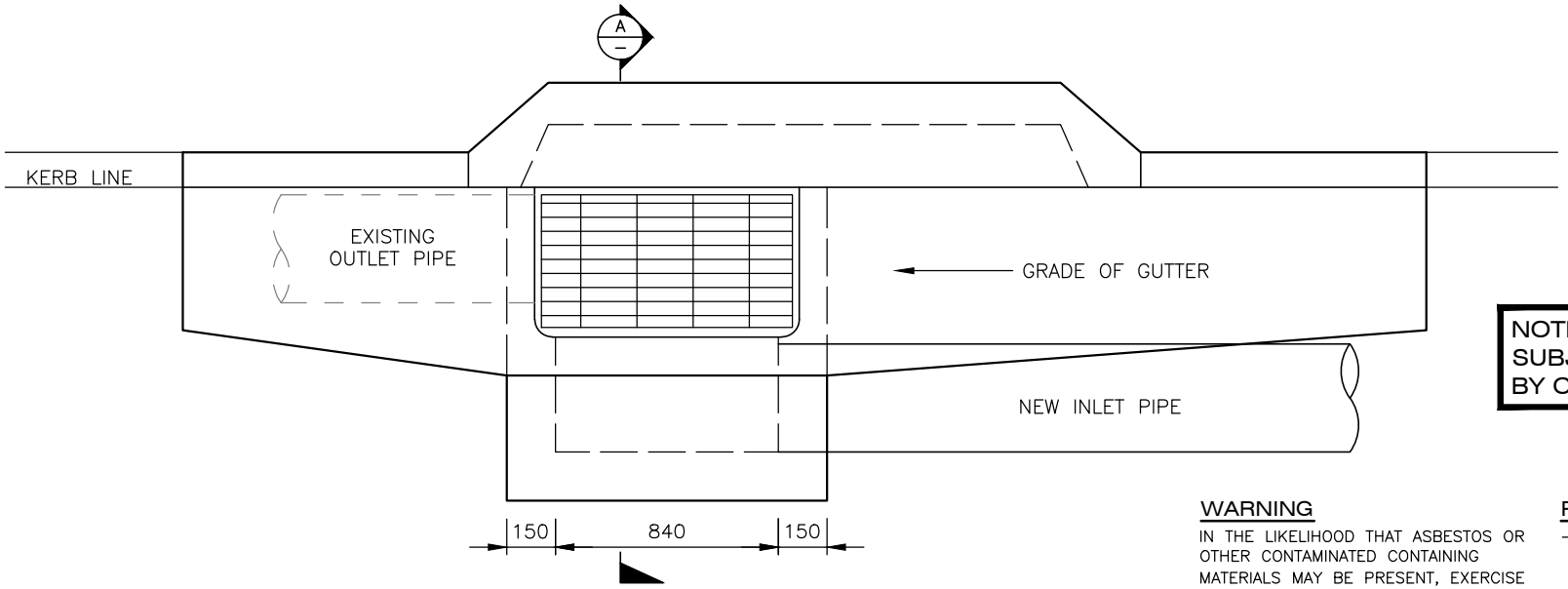

PLAN

NOTE:
SUBJECT TO APPROVAL
BY COUNCIL PRIOR TO USE

WARNING

IN THE LIKELIHOOD THAT ASBESTOS OR OTHER CONTAMINATED CONTAINING MATERIALS MAY BE PRESENT, EXERCISE APPROPRIATE CAUTION AND TREAT IN ACCORDANCE WITH WHS REGULATIONS AND THE EPA CONTAMINATED LAND MANAGEMENT REGULATION.

PIT GRATE AND FRAME

- PIT GRATE AND FRAME ARE TO BE DURHAM DRAINAGE PRODUCTS OR APPROVED EQUIVALENT AND COMPLY TO AS 3996:2019.
- CLASS OF GRATE AND FRAME ARE TO BE:
  - CLASS "D" FOR ROAD WAY
  - CLASS "C" ELSEWHERE
- GRATE AND FRAME TO BE "MEDIUM/HEAVY" TRAFFICABLE BIKE SAFE

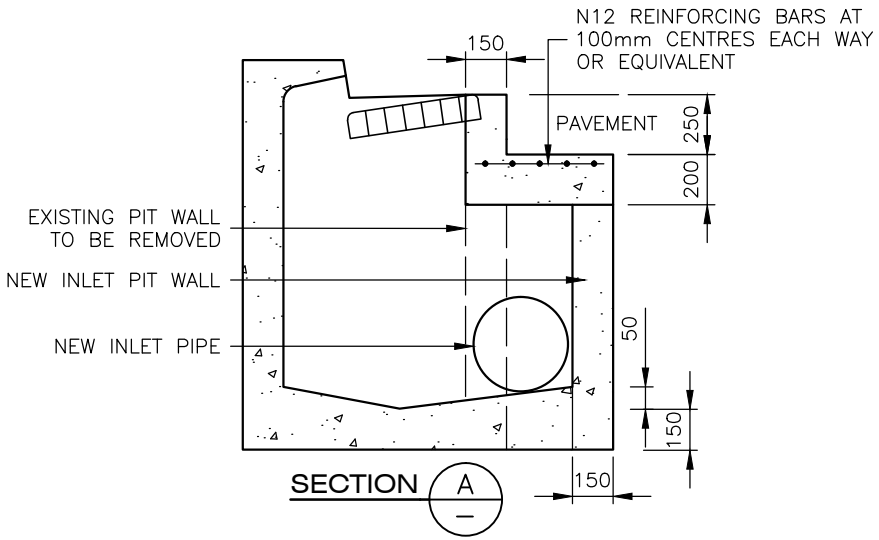

SECTION A

NOTES

1. CONCRETE TO BE A MINIMUM OF N32 IN ACCORDANCE WITH AS 1012, AS 1379–2007 (R2017) AND AS 3600:2018
2. WHERE INTERNAL WIDTH EXCEEDS 750mm OR DEPTH EXCEEDS 1200mm WALLS TO BE REINFORCED. PROVIDE N16 REINFORCEMENT AT 250mm CENTRE/CENTRE BOTH WAYS OR MESH SL72 CENTRALLY PLACED.
3. MINIMUM WALL AND BASE THICKNESS MUST BE 150mm ("T") AND WHERE PIT DEPTH EXCEEDS 1200mm TO BE 200mm ("T") OR AS SPECIFIED ON DESIGN.
4. MINIMUM WIDTH OF "W" SHOULD BE OD (OUTER DIAMETER) OF LARGER PIPE +200mm
5. ALL EXISTING CONCRETE SURFACES WHICH ARE TO BE BONDED TO NEW CONCRETE ARE TO BE SCABBLED AND ALL LOOSE MATERIAL REMOVED.
6. STEP IRONS TO BE PROVIDED AT 300mm CENTRES FOR PITS GREATER THAN 1200mm DEEP AND PLACED ON A WALL CLEAR OF FLOW WHERE POSSIBLE IN ACCORDANCE WITH AS 1657:2018. REFER TO COUNCIL STANDARD DRAWING DS19.
7. SELECTED GRANULAR MATERIAL BACKFILL SHALL BE PLACED TO FILL ALL EXCAVATED VOIDS. (REFER TO AS / NZS 3725:2007)
8. MINIMUM COVER TO ALL PIPES TO BE 600mm UNDER ROADS AND 450mm ELSEWHERE.
9. WHERE DIRECTED PROVIDE 100mmø SUBSOIL DRAINAGE PIPE/AGLINE 3.0m LONG WRAPPED IN FABRIC SOCK PLACED ADJACENT TO INLET PIPES ON BOTH SIDES AND 100mm MINIMUM ABOVE PIT FLOOR. SURROUND SUBSOIL DRAINAGE PIPE/AGLINE WITH 10mm AGGREGATE.
10. ALL DIMENSIONS ARE IN MILLIMETRES UNLESS OTHERWISE SHOWN.

AMENDMENTS			
No.	DETAIL	DATE	CHECKED

DESIGNED / DRAWN Date:
DESIGN CHECKED & APPROVED Date:
MANAGER CAPITAL PROJECTS Date:

Scale: N.T.S. **FINAL**

ASSET OWNER Date:
GROUP MANAGER CITY ASSETS & ENVIRONMENT Date:

CITY OF PARRAMATTA COUNCIL

EXTENDED CHAMBER GULLY PIT
(FOR EXISTING PIT)

PLAN, SECTION, AND NOTES

PLAN N° DS28
Sheet No : 2
Revision :

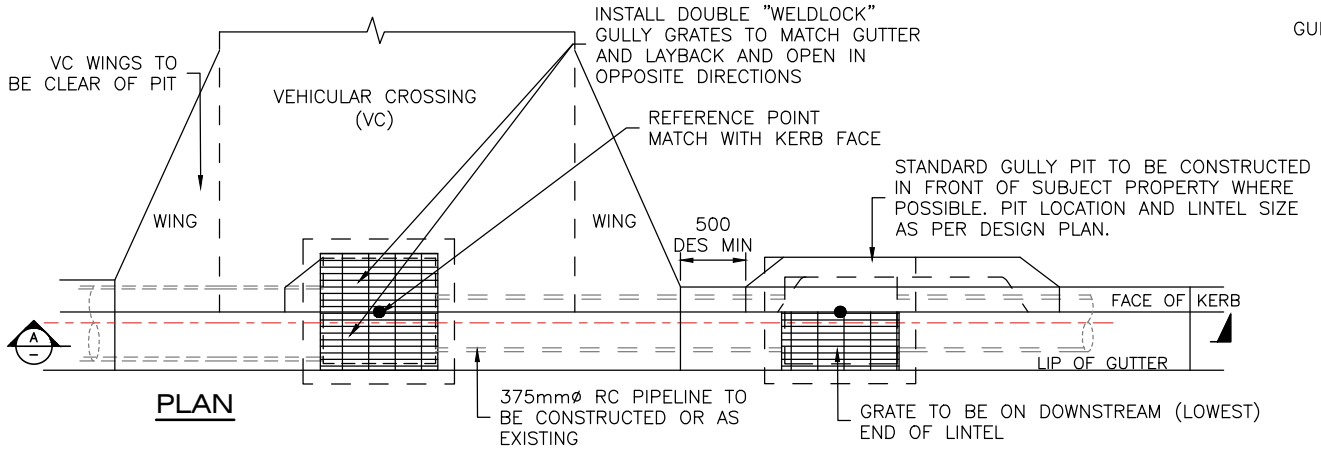

PLAN

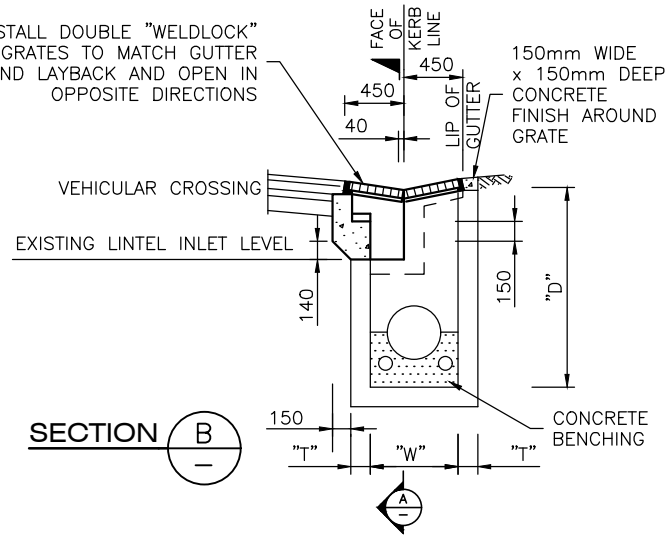

SECTION B

PIT GRATE AND FRAME

- PIT GRATE AND FRAME ARE TO BE DURHAM DRAINAGE PRODUCTS OR APPROVED EQUIVALENT AND COMPLY TO AS 3996:2019.
- CLASS OF GRATE AND FRAME ARE TO BE CLASS "D" FOR ROAD WAY
- HEEL PROOF GRATE AND FRAME WITH RELEVANT CLASS ARE TO BE USED.

NOTE:
100mm DIA. SUBSOIL DRAINAGE PIPE/AGLINE 3.0m LONG WRAPPED IN FABRIC SOCK TO BE PLACED ADJACENT TO INLET PIPES ON BOTH SIDES AND 100mm MINIMUM ABOVE PIT FLOOR. SURROUND SUBSOIL DRAINAGE PIPE/AGLINE WITH 10mm AGGREGATE.

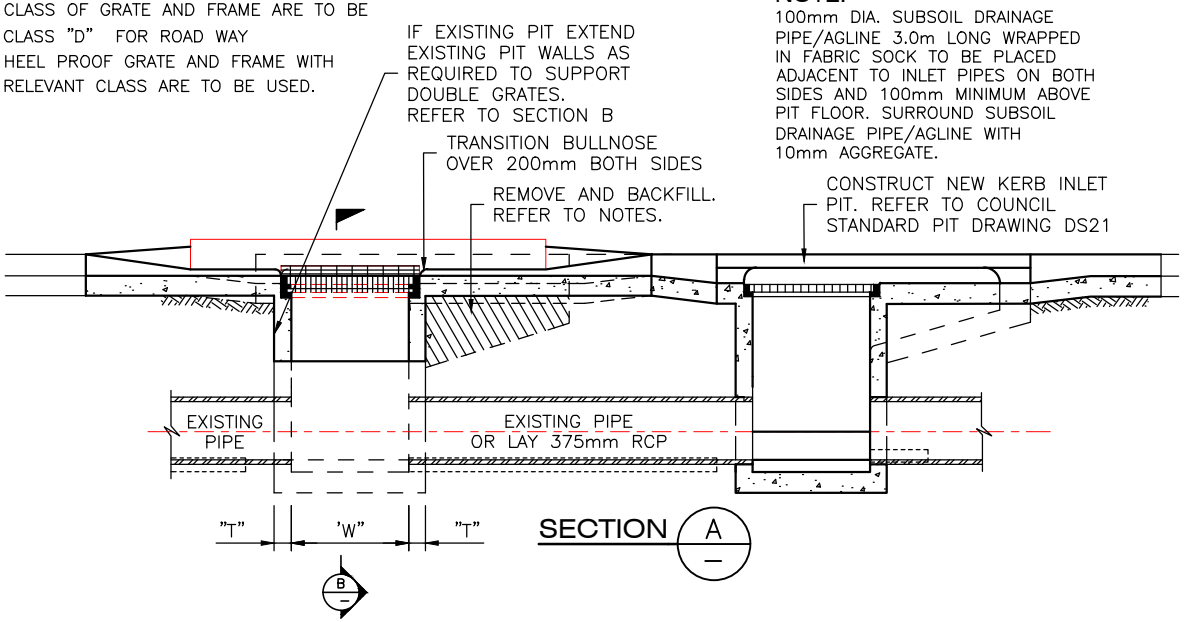

SECTION A

NOTES

1. MINIMUM COVER TO ALL PIPES TO BE 600mm UNDER ROADS AND 450mm ELSEWHERE.
2. ALL PIPES TO BE LAID SO THAT THEIR CENTRELINES INTERSECT AT THE CENTRE OF THE PIT.
3. PITS DEEPER THAN 2500mm TO BE DESIGNED AND CERTIFIED BY A QUALIFIED EXPERIENCED PRACTICING STRUCTURAL ENGINEER. (PRECAST OR CAST IN–SITU)
4. PRECAST PITS CAN BE USED ONLY IF THEY ARE CONSISTENT WITH COUNCIL'S MINIMUM REQUIREMENTS AS SHOWN ON COUNCIL'S STANDARD DRAWINGS AND IN ACCORDANCE WITH MANUFACTURERS SPECIFICATIONS AND AT THE DIRECTION OF THE SUPERINTENDENT.
5. PIT LOCATION AND TOP OF LINTEL LEVEL SHOWN ON DRAWINGS REFER TO THIS POINT ●
6. ALL INTERNAL PIT CORNERS TO BE PROVIDED WITH BENCHING TO IMPROVE FLOW.
7. STEP IRONS TO BE PROVIDED AT 300mm CENTRES FOR PITS GREATER THAN 1200mm DEEP AND PLACED ON A WALL CLEAR OF FLOW WHERE POSSIBLE IN ACCORDANCE WITH AS 1657:2018. REFER TO COUNCIL STANDARD DS19.
8. WHERE INTERNAL WIDTH EXCEEDS 750mm OR DEPTH EXCEEDS 1200mm WALLS TO BE REINFORCED. PROVIDE N16 REINFORCEMENT AT 250mm CENTRE/CENTRE BOTH WAYS OR MESH SL72 CENTRALLY PLACED.
9. MINIMUM WALL AND BASE THICKNESS MUST BE 150mm ("T") AND WHERE PIT DEPTH EXCEEDS 1200mm TO BE 200mm ("T") OR AS SPECIFIED IN THE DESIGN.
10. MINIMUM WIDTH OF "W" SHOULD BE OD (OUTER DIAMETER) OF LARGER PIPE + 200mm.
11. CONCRETE TO BE A MINIMUM OF N32 IN ACCORDANCE WITH AS 1012, AS 1379–2007 (R2017) AND AS 3600:2018.
12. SELECTED GRANULAR MATERIAL BACKFILL SHALL BE PLACED TO FILL ALL EXCAVATED VOIDS. REFER TO AS / NZS 3725–2007.
13. ALL DIMENSIONS ARE IN MILLIMETRES UNLESS OTHERWISE SHOWN.

AMENDMENTS			
No.	DETAIL	DATE	CHECKED

DESIGNED / DRAWN Date:
DESIGN CHECKED & APPROVED Date:
MANAGER CAPITAL PROJECTS Date:

Scale: N.T.S. **FINAL**
ASSET OWNER Date:
GROUP MANAGER CITY ASSETS & ENVIRONMENT Date:

CITY OF PARRAMATTA COUNCIL

SURFACE INLET PIT
FOR DRIVEWAYS

PLAN, SECTIONS AND NOTES

PLAN N° DS29
Sheet No : 1 of 1
Revision :

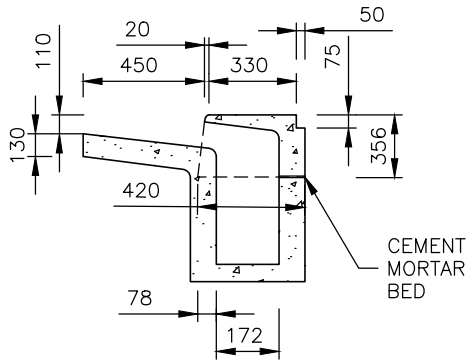

SECTION A
N.T.S.

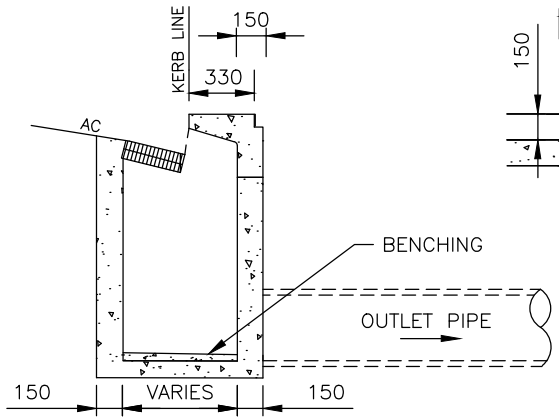

SECTION B
N.T.S.

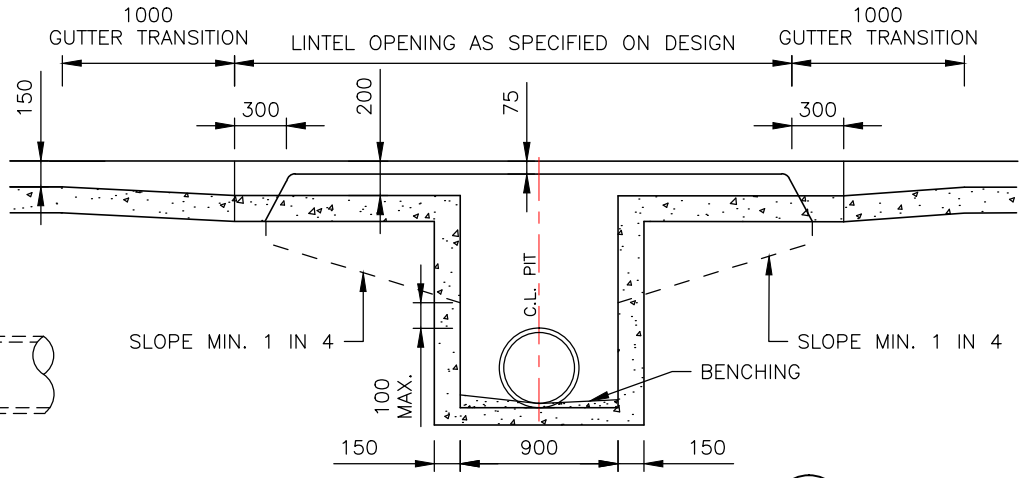

SECTIONAL ELEVATION C
N.T.S.

PIT GRATE AND FRAME

- PIT GRATE AND FRAME ARE TO BE DURHAM DRAINAGE PRODUCTS OR APPROVED EQUIVALENT AND COMPLY TO AS 3996:2019.
- CLASS OF GRATE AND FRAME ARE TO BE:
  CLASS "D" FOR ROAD WAY
  CLASS "C" ELSEWHERE
- GRATE AND FRAME TO BE "MEDIUM/HEAVY" TRAFFICABLE BIKE SAFE

WARNING

IN THE LIKELIHOOD THAT ASBESTOS OR OTHER CONTAMINATED CONTAINING MATERIALS MAY BE PRESENT, EXERCISE APPROPRIATE CAUTION AND TREAT IN ACCORDANCE WITH WHS REGULATIONS AND THE EPA CONTAMINATED LAND MANAGEMENT REGULATION.

NOTES

1. MINIMUM COVER TO ALL PIPES TO BE 600mm UNDER ROADS AND 450mm ELSEWHERE.
2. ALL PIPES TO BE LAID SO THAT THEIR CENTRELINES INTERSECT AT THE CENTRE OF THE PIT.
3. PITS DEEPER THAN 2500mm TO BE DESIGNED AND CERTIFIED BY A QUALIFIED EXPERIENCED PRACTICING STRUCTURAL ENGINEER. (PRECAST OR CAST IN–SITU)
4. PRECAST PITS CAN BE USED ONLY IF THEY ARE CONSISTENT WITH COUNCIL'S MINIMUM REQUIREMENTS AS SHOWN ON COUNCIL'S STANDARD DRAWINGS AND IN ACCORDANCE WITH MANUFACTURERS SPECIFICATIONS AND AT THE DIRECTION OF THE SUPERINTENDENT.
5. ALL INTERNAL PIT CORNERS TO BE PROVIDED WITH BENCHING TO IMPROVE FLOW.
6. STEP IRONS TO BE PROVIDED AT 300mm CENTRES FOR PITS GREATER THAN 1200mm DEEP AND PLACED ON A WALL CLEAR OF FLOW WHERE POSSIBLE IN ACCORDANCE WITH AS 1657:2018. REFER TO COUNCIL STANDARD DS19.
7. WHERE INTERNAL WIDTH EXCEEDS 750mm OR DEPTH EXCEEDS 1200mm WALLS TO BE REINFORCED. PROVIDE N16 REINFORCEMENT AT 250mm CENTRE/CENTRE BOTH WAYS OR MESH SL72 CENTRALLY PLACED.
8. MINIMUM WALL AND BASE THICKNESS MUST BE 150mm ("T") AND WHERE PIT DEPTH EXCEEDS 1200mm TO BE 200mm ("T") OR AS SPECIFIED IN THE DESIGN.
9. MINIMUM WIDTH OF "W" SHOULD BE OD (OUTER DIAMETER) OF LARGER PIPE + 200mm.
10. CONCRETE TO BE N32 IN ACCORDANCE WITH AS 1012, AS 1379–2007 (R2017) AND AS 3600:2018.
11. SELECTED GRANULAR MATERIAL BACKFILL SHALL BE PLACED TO FILL ALL EXCAVATED VOIDS. REFER TO AS / NZS 3725:2007.
12. ALL DIMENSIONS ARE IN MILLIMETRES UNLESS OTHERWISE SHOWN.

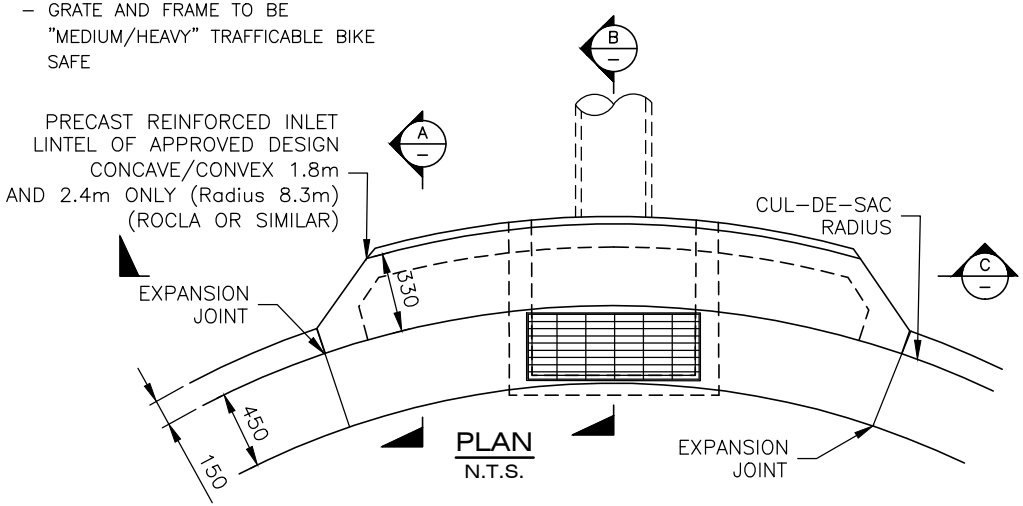

PLAN
N.T.S.

AMENDMENTS			
No.	DETAIL	DATE	CHECKED

DESIGNED / DRAWN Date:
DESIGN CHECKED & APPROVED Date:
MANAGER CAPITAL PROJECTS Date:

Scale: AS SHOWN **FINAL**
ASSET OWNER Date:
GROUP MANAGER CITY ASSETS & ENVIRONMENT Date:

CITY OF PARRAMATTA COUNCIL

SAG PIT ON A CUL–DE–SAC

PLAN, SECTIONAL ELEVATION, SECTIONS AND NOTES

PLAN N° DS32
Sheet No : 1
Revision :

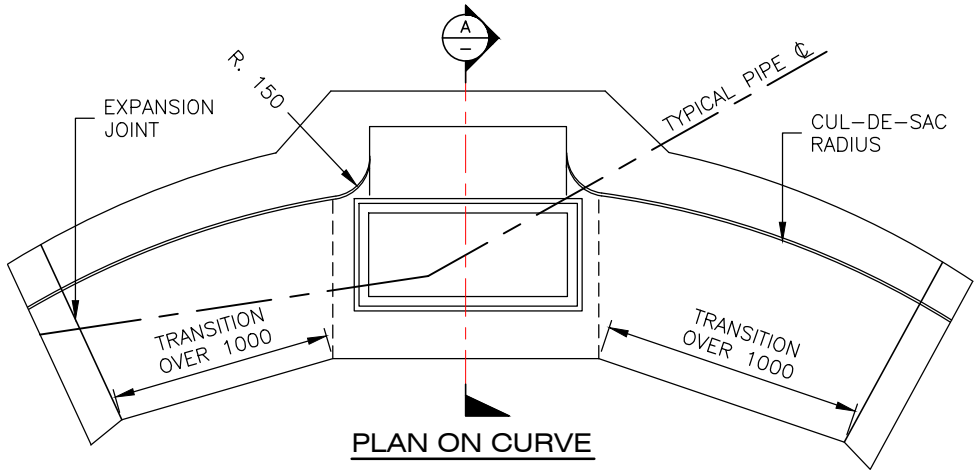

PLAN ON CURVE

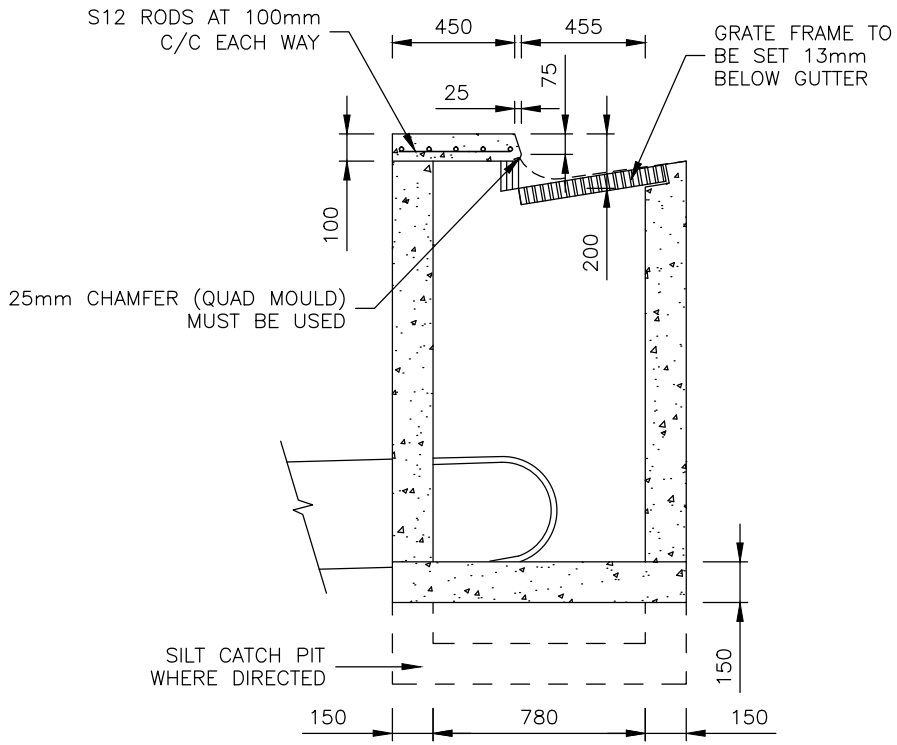

SECTION A

NOTES

1. WHERE INTERNAL WIDTH EXCEEDS 750mm OR DEPTH EXCEEDS 1200mm WALLS TO BE REINFORCED. PROVIDE N16 REINFORCEMENT AT 250mm CENTRE/CENTRE BOTH WAYS OR MESH SL72 CENTRALLY PLACED.
2. MINIMUM WALL AND BASE THICKNESS MUST BE 150mm ("T") AND WHERE PIT EXCEEDS 1200mm TO BE 200mm ("T") OR AS SPECIFIED ON THE DESIGN.
3. MINIMUM WIDTH OF "W" SHOULD BE OD (OUTER DIAMETER) OF LARGER PIPE +200.
4. IF THE PIPES ARE LARGER THAN 750mm DIAMETER OR WHERE LOCATIONS DO NOT PERMIT THE USE OF STANDARD PITS, PROPOSED VARIATIONS MUST BE INSTRUCTED BY THE SUPERINTENDENT.
5. PIPES SHOULD BE LAID SO THAT THEIR CENTRE LINES INTERSECT WITH THE CENTRE OF THE PIT.
6. MINIMUM COVER TO ALL PIPES TO BE 600mm UNDER ROADS AND 450mm ELSEWHERE.
7. STEP IRONS ARE TO BE PROVIDED AT 300mm CENTRES FOR PITS GREATER THAN 1200mm DEEP AND PLACED ON A WALL CLEAR OF FLOW WHERE POSSIBLE IN ACCORDANCE WITH AS 1657:2018. REFER TO COUNCIL STANDARD DRAWING DS19.
8. SILT TRAPS ON INLET PITS SHALL ONLY BE PROVIDED AS DIRECTED BY THE SUPERINTENDENT.
9. THE KERB AND GUTTER APRON BETWEEN THE EXPANSION JOINTS INCORPORATING THE GRATE FRAME MUST BE POURED AS ONE.
10. WHERE DIRECTED PROVIDE 100mmø SUBSOIL DRAINAGE PIPE/AGLINE 3.0m LONG WRAPPED IN FABRIC SOCK PLACED ADJACENT TO INLET PIPES ON BOTH SIDES AND 100mm MINIMUM ABOVE PIT FLOOR. SURROUND SUBSOIL DRAINAGE PIPE/AGLINE WITH 10mm AGGREGATE.
11. SELECTED GRANULAR MATERIAL BACKFILL SHALL BE PLACED TO FILL ALL EXCAVATED VOIDS. (REFER TO AS / NZS 3725:2007)
12. CONCRETE TO BE A MINIMUM OF N32 IN ACCORDANCE WITH AS 1012, AS 1379–2007 (R2017) AND AS 3600:2018
13. ALL DIMENSIONS ARE IN MILLIMETRES UNLESS SHOWN OTHERWISE.

NOTE:
SUBJECT TO APPROVAL BY COUNCIL PRIOR TO USE

PIT GRATE AND FRAME

- PIT GRATE AND FRAME ARE TO BE DURHAM DRAINAGE PRODUCTS OR APPROVED EQUIVALENT AND COMPLY TO AS 3996:2019.
- CLASS OF GRATE AND FRAME ARE TO BE CLASS "D" FOR ROAD WAY.
- GRATE AND FRAME TO BE "MEDIUM/HEAVY" TRAFFICABLE BIKE SAFE.

WARNING

IN THE LIKELIHOOD THAT ASBESTOS OR OTHER CONTAMINATED CONTAINING MATERIALS MAY BE PRESENT, EXERCISE APPROPRIATE CAUTION AND TREAT IN ACCORDANCE WITH WHS REGULATIONS AND THE EPA CONTAMINATED LAND MANAGEMENT REGULATION.

AMENDMENTS			
No.	DETAIL	DATE	CHECKED

DESIGNED / DRAWN Date:
DESIGN CHECKED & APPROVED Date:
MANAGER CAPITAL PROJECTS Date:

Scale: N.T.S. **FINAL**
ASSET OWNER Date:
GROUP MANAGER CITY ASSETS & ENVIRONMENT Date:

CITY OF PARRAMATTA COUNCIL

GRATED INSPECTION PIT
FOR CUL–DE–SAC WITH CAST INSITU LINTEL

PLAN, SECTION AND NOTES

PLAN N° DS32
Sheet No : 2
Revision :

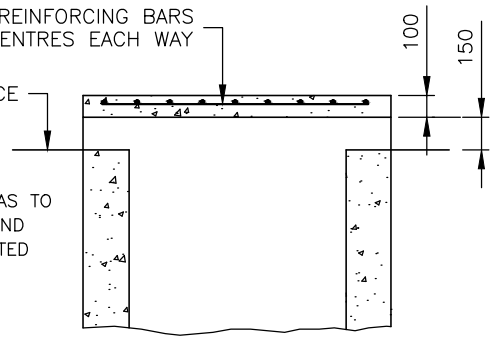

NOTE

PIT TO BE LOCATED SO AS TO ENABLE FUTURE GRATE AND LINTEL TO BE CONSTRUCTED ON CORRECT ALIGNMENT.

SURFACE INLET PIT
DOUBLE SIDED ON SAG
SINGLE SIDED ON GRADE

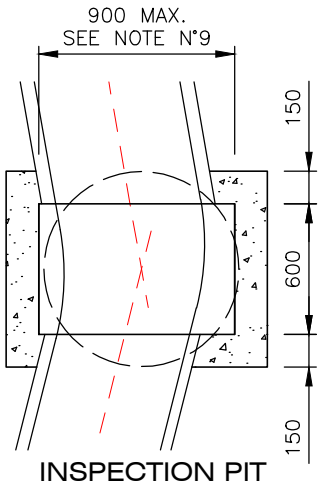

INSPECTION PIT
PLAN VIEW

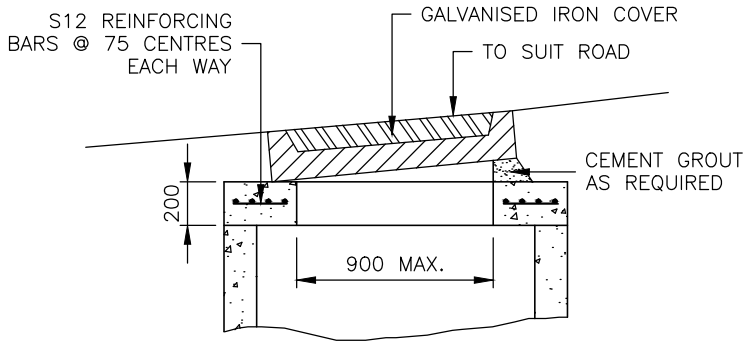

INSPECTION PIT
ROADWAY TYPE SECTION

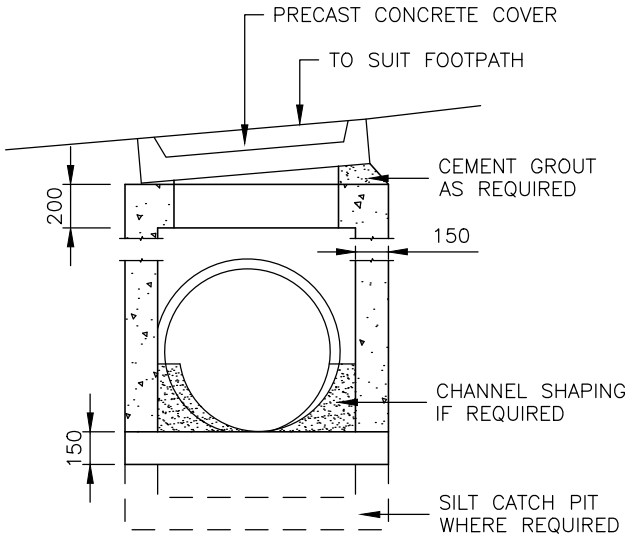

INSPECTION PIT
FOOTPATH TYPE SECTION

WARNING

IN THE LIKELIHOOD THAT ASBESTOS OR OTHER CONTAMINATED CONTAINING MATERIALS MAY BE PRESENT, EXERCISE APPROPRIATE CAUTION AND TREAT IN ACCORDANCE WITH WHS REGULATIONS AND THE EPA CONTAMINATED LAND MANAGEMENT REGULATION.

NOTE:
SUBJECT TO APPROVAL BY COUNCIL PRIOR TO USE

NOTES

1. WHERE INTERNAL WIDTH EXCEEDS 750mm OR DEPTH EXCEEDS 1200mm WALLS TO BE REINFORCED. PROVIDE N16 REINFORCEMENT AT 250mm CENTRE/CENTRE BOTH WAYS OR MESH SL72 CENTRALLY PLACED.
2. MINIMUM WALL AND BASE THICKNESS MUST BE 150mm ("T") AND WHERE PIT EXCEEDS 1200mm TO BE 200mm ("T") OR AS SPECIFIED ON THE DESIGN.
3. MINIMUM WIDTH OF "W" SHOULD BE OD (OUTER DIAMETER) OF LARGER PIPE +200.
4. IF THE PIPES ARE LARGER THAN 750mm DIAMETER OR WHERE LOCATIONS DO NOT PERMIT THE USE OF STANDARD PITS, PROPOSED VARIATIONS MUST BE INSTRUCTED BY THE SUPERINTENDENT.
5. PIPES SHOULD BE LAID SO THAT THEIR CENTRE LINES INTERSECT WITH THE CENTRE OF THE PIT.
6. MINIMUM COVER TO ALL PIPES TO BE 600mm UNDER ROADS AND 450mm ELSEWHERE.
7. STEP IRONS ARE TO BE PROVIDED AT 300mm CENTRES FOR PITS GREATER THAN 1200mm DEEP AND PLACED ON A WALL CLEAR OF FLOW WHERE POSSIBLE IN ACCORDANCE WITH AS 1657:2018. REFER TO COUNCIL STANDARD DRAWING DS19.
8. SILT TRAPS ON INLET PITS SHALL ONLY BE PROVIDED AS DIRECTED BY THE SUPERINTENDENT.
9. THE BOTTOMS OF INSPECTION PITS CARRYING PIPES 900mm DIAMETER OR LARGER SHALL BE CHANNELED TO PRESERVE THE PROFILE OF THE LOWER HALF OF THE PIPELINE.
10. SELECTED GRANULAR MATERIAL BACKFILL SHALL BE PLACED TO FILL ALL EXCAVATED VOIDS. (REFER TO AS / NZS 3725:2007)
11. CONCRETE TO BE A MINIMUM OF N32 IN ACCORDANCE WITH AS 1012, AS 1379–2007 (R2017) AND AS 3600:2018
12. ALL DIMENSIONS ARE IN MILLIMETRES UNLESS SHOWN OTHERWISE.

AMENDMENTS			
No.	DETAIL	DATE	CHECKED

DESIGNED / DRAWN Date:
DESIGN CHECKED & APPROVED Date:
MANAGER CAPITAL PROJECTS Date:

Scale: N.T.S. **FINAL**
ASSET OWNER Date:
GROUP MANAGER CITY ASSETS & ENVIRONMENT Date:

CITY OF PARRAMATTA COUNCIL

INSPECTION PIT FOR FOOTPATH AND ROADWAY SURFACE INLET PIT

PLAN, SECTIONS, AND NOTES

PLAN N° DS32
Sheet No : 3
Revision :

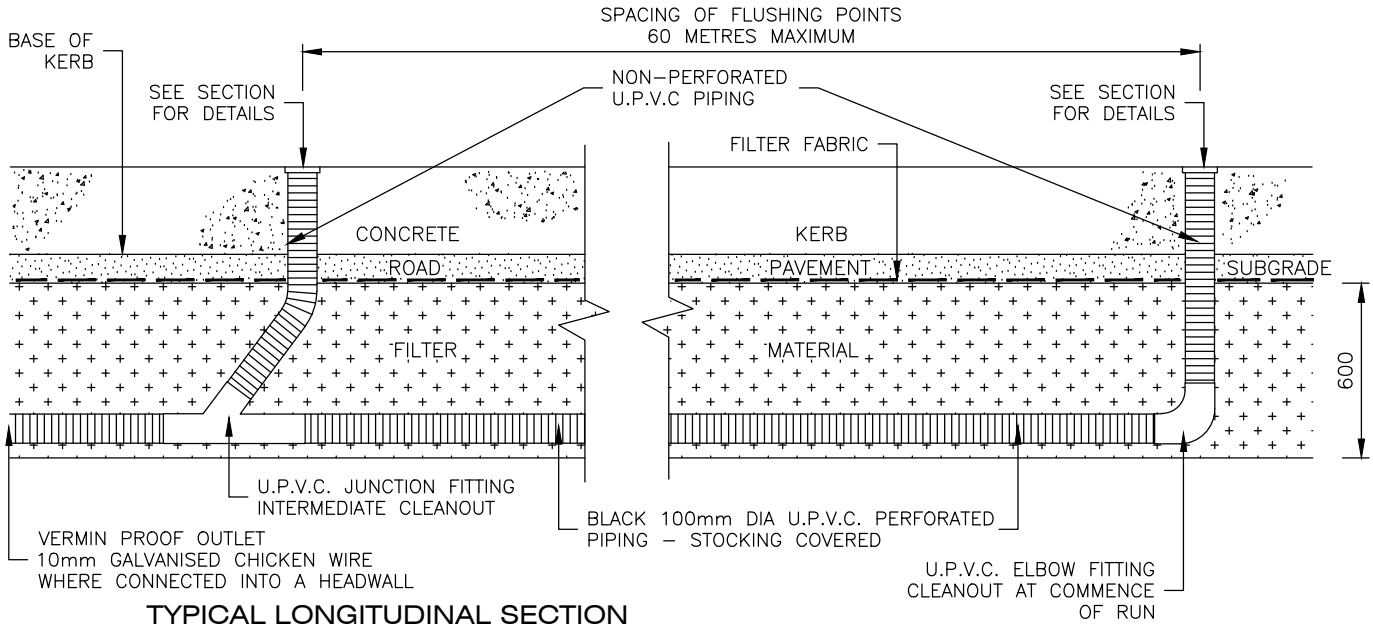

TYPICAL LONGITUDINAL SECTION

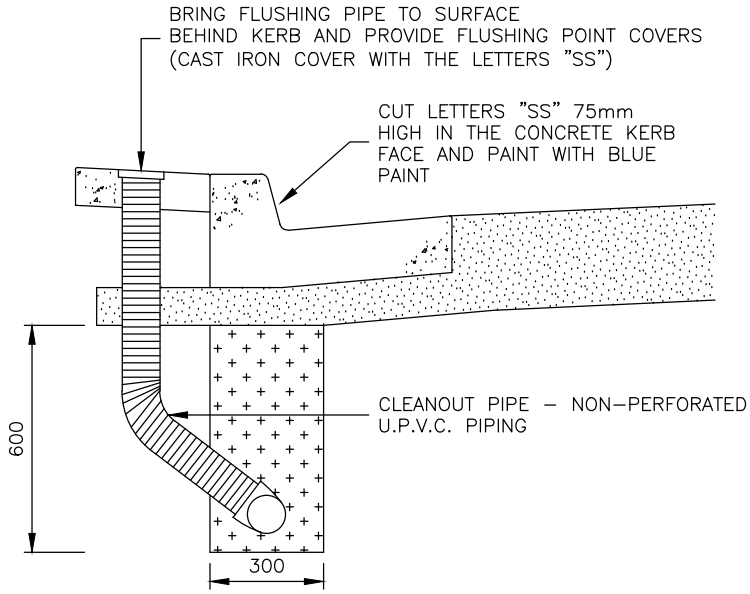

SECTION AT FLUSHING POINT

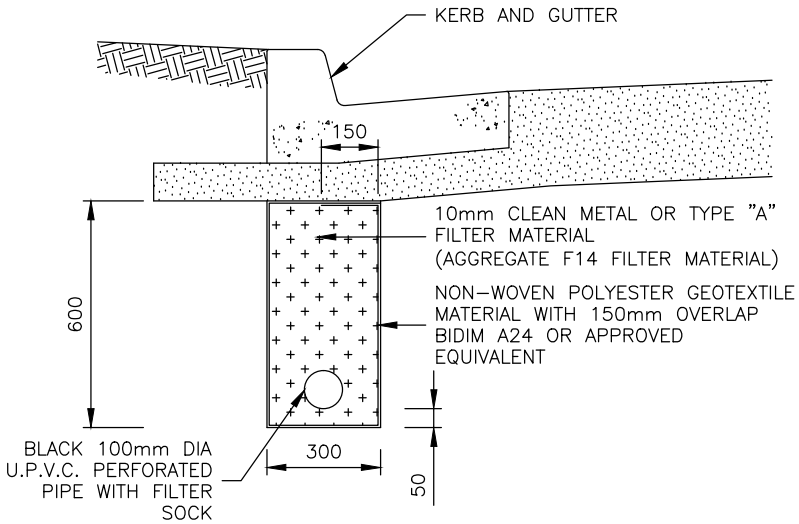

TYPICAL SECTION

NOTES

1. EXACT LOCATION WHETHER IN ROAD OR BEHIND KERB AND GUTTER TO BE IN ACCORDANCE WITH APPROVED DESIGN DRAWINGS OR AS DETERMINED ON SITE PENDING NUMBER OF CONCRETE DRIVEWAYS THAT NEED TO BE DISTURBED.
2. SELECTED GRANULAR MATERIAL BACKFILL SHALL BE PLACED TO FILL ALL EXCAVATED VOIDS. REFER TO AS / NZS 3725:2007.
3. ALL WORKS AND MATERIALS TO BE ACCORDING TO "AUSPEC"
4. ALL DIMENSIONS ARE IN MILLIMETRES UNLESS OTHERWISE SHOWN.

WARNING

IN THE LIKELIHOOD THAT ASBESTOS OR OTHER CONTAMINATED CONTAINING MATERIALS MAY BE PRESENT, EXERCISE APPROPRIATE CAUTION AND TREAT IN ACCORDANCE WITH WHS REGULATIONS AND THE EPA CONTAMINATED LAND MANAGEMENT REGULATION.

DESIGNED / DRAWN Date:	Scale: N.T.S. FINAL	CITY OF PARRAMATTA COUNCIL	PLAN N°
DESIGN CHECKED & APPROVED Date:	ASSET OWNER Date:	SUBSOIL DRAINAGE DETAILS	DS33
MANAGER CAPITAL PROJECTS Date:	GROUP MANAGER CITY ASSETS & ENVIRONMENT Date:	TYPICAL LONGITUDINAL SECTION, SECTION AT FLUSHING POINT, TYPICAL SECTION AND NOTES	Sheet No : 1 of 1 Revision :

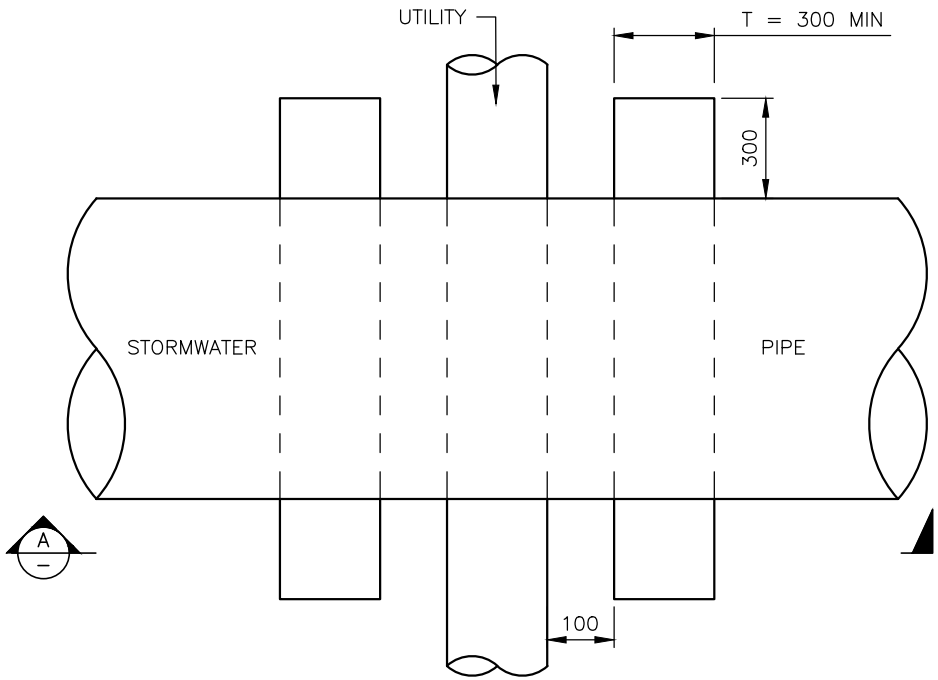

PLAN

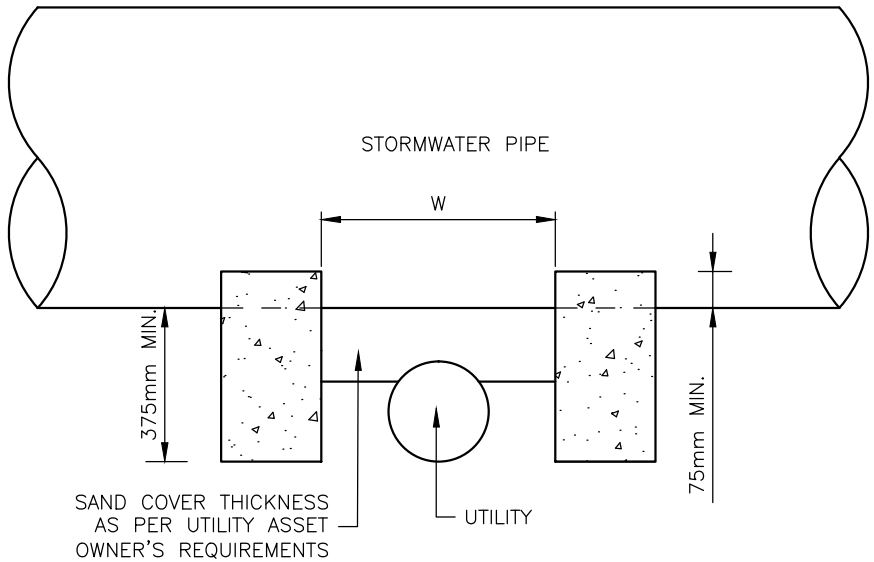

SECTION A

NOTE:
SUBJECT TO APPROVAL OF RELEVANT SERVICE UTILITY AUTHORITY

NOTE:
CRADLE AND OR ANY OTHER ASSOCIATED WORKS TO BE CONSTRUCTED AS PER RELEVANT SERVICE UTILITY AUTHORITIES STANDARDS

NOTES

1. CONCRETE FOR CRADLE TO BE N32 IN ACCORDANCE WITH AS 1012, AS 1379–2007 (R2017) AND AS 3600:2018
2. CONFIRMATION OF LOCATION OF THE CRADLE TO BE ADVISED BY THE SUPERINTENDENT.
3. T = 450 IF W > 750 ø
4. ALL DIMENSIONS ARE IN MILLIMETRES UNLESS STATED OTHERWISE.

WARNING

IN THE LIKELIHOOD THAT ASBESTOS OR OTHER CONTAMINATED CONTAINING MATERIALS MAY BE PRESENT, EXERCISE APPROPRIATE CAUTION AND TREAT IN ACCORDANCE WITH WHS REGULATIONS AND THE EPA CONTAMINATED LAND MANAGEMENT REGULATION.

AMENDMENTS			
No.	DETAIL	DATE	CHECKED

DESIGNED / DRAWN Date:
DESIGN CHECKED & APPROVED Date:
MANAGER CAPITAL PROJECTS Date:

Scale: N.T.S **FINAL**
ASSET OWNER Date:
GROUP MANAGER CITY ASSETS & ENVIRONMENT Date:

CITY OF PARRAMATTA COUNCIL

CONCRETE SUPPORT CRADLE
FOR USE ON PIPELINES IN CLOSE PROXIMITY TO UTILITY

PLAN, SECTION AND NOTES

PLAN N° DS34
Sheet No : 1 of 1
Revision :

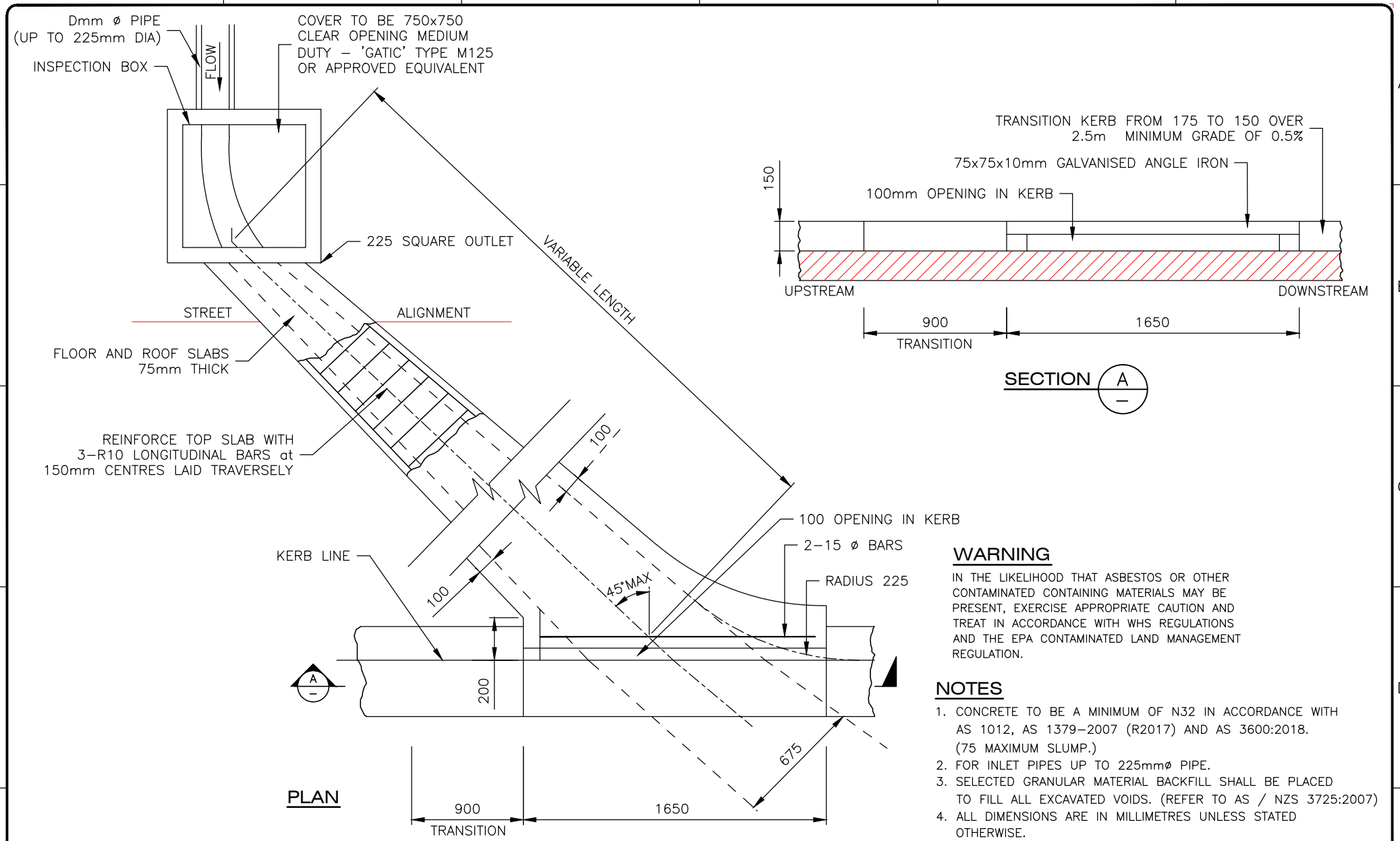

WARNING

IN THE LIKELIHOOD THAT ASBESTOS OR OTHER CONTAMINATED CONTAINING MATERIALS MAY BE PRESENT, EXERCISE APPROPRIATE CAUTION AND TREAT IN ACCORDANCE WITH WHS REGULATIONS AND THE EPA CONTAMINATED LAND MANAGEMENT REGULATION.

NOTES

1. CONCRETE TO BE A MINIMUM OF N32 IN ACCORDANCE WITH AS 1012, AS 1379–2007 (R2017) AND AS 3600:2018. (75 MAXIMUM SLUMP.)
2. FOR INLET PIPES UP TO 225mmø PIPE.
3. SELECTED GRANULAR MATERIAL BACKFILL SHALL BE PLACED TO FILL ALL EXCAVATED VOIDS. (REFER TO AS / NZS 3725:2007)
4. ALL DIMENSIONS ARE IN MILLIMETRES UNLESS STATED OTHERWISE.

AMENDMENTS			
No.	DETAIL	DATE	CHECKED

DESIGNED / DRAWN Date:

DESIGN CHECKED & APPROVED Date:

MANAGER CAPITAL PROJECTS Date:

Scale: N.T.S **FINAL**

ASSET OWNER Date:

GROUP MANAGER CITY ASSETS & ENVIRONMENT Date:

CITY OF PARRAMATTA COUNCIL

STANDARD

PIPE CONVERTER TO 150mm KERB

PLAN, SECTION AND NOTES

PLAN N° DS35

Sheet No : 1 of 1

Revision :

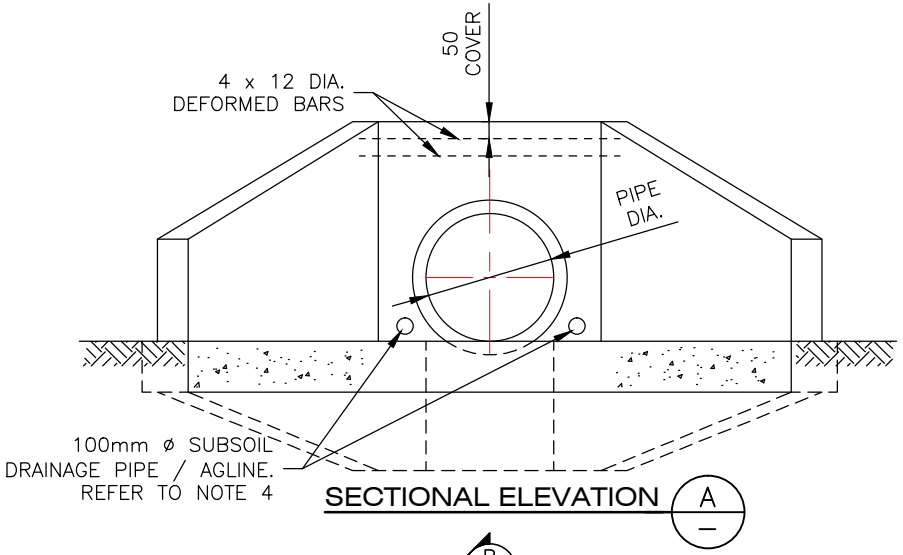

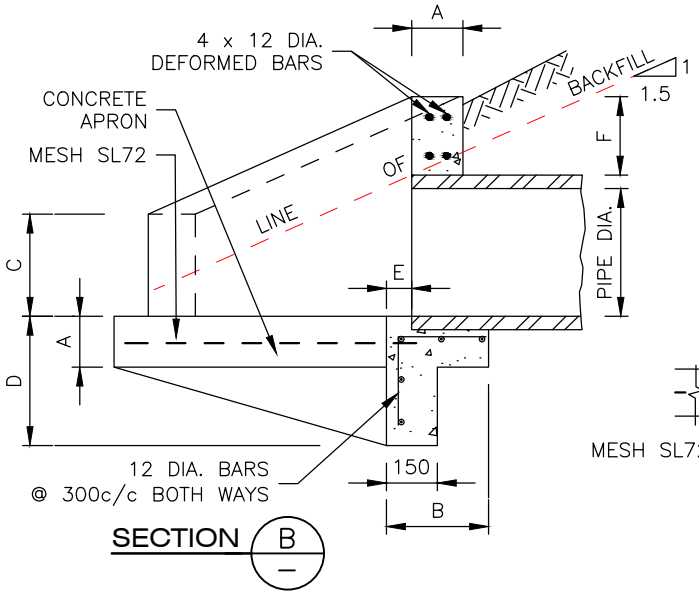

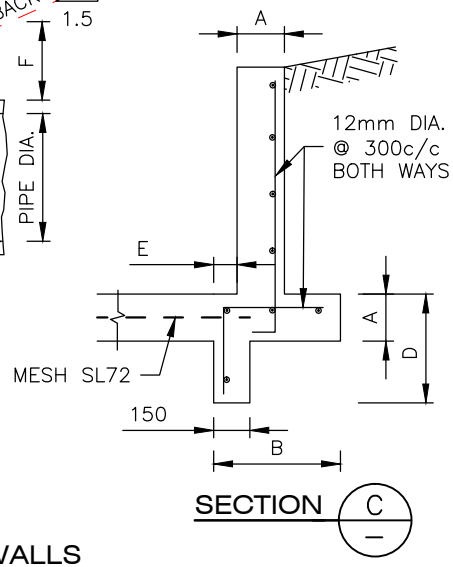

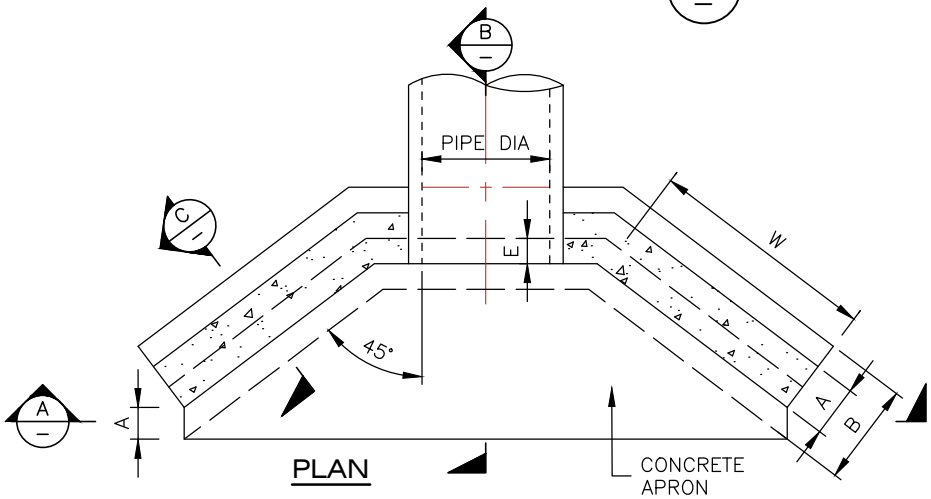

DIMENSIONS FOR HEADWALLS

PIPE DIA.	W	A	B	C	D	E	F	VOLUME * CU. METRES
375	700	150	300	300	380	75	230	0.76
450	850	150	300	300	380	75	230	0.91
525	1000	150	300	300	380	75	230	1.06
600	1120	175	450	380	550	110	300	1.66
750	1500	200	450	380	550	110	300	2.32
900	1800	230	450	380	550	110	300	3.07

* VOLUMES OF CONCRETE ARE APPROXIMATE ONLY.

NOTES

1. MINIMUM COVER TO ALL PIPES TO BE 600mm UNDER ROADS AND 450mm ELSEWHERE.
2. CONCRETE IS TO BE A MINIMUM N32 IN ACCORDANCE WITH AS 1012, AS 1379–2007 (R2017) AND AS 3600:2018.
3. SELECTED GRANULAR MATERIAL BACKFILL SHALL BE PLACED TO FILL ALL EXCAVATED VOIDS. REFER TO AS / NZS 3725:2007
4. WHERE DIRECTED PROVIDE 100mmø SUBSOIL DRAINAGE PIPE/AGLINE 3.0m LONG WRAPPED IN FABRIC SOCK PLACED ADJACENT TO INLET PIPES ON BOTH SIDES AND 100mm MINIMUM ABOVE PIT FLOOR. SURROUND SUBSOIL DRAINAGE/AGLINE WITH 10mm AGGREGATE.
5. FOR DOWNSTREAM PROTECTION DETAILS REFER TO COUNCIL STANDARD DRAWING DS18
6. ALL DIMENSIONS ARE IN MILLIMETRES UNLESS STATED OTHERWISE.

WARNING

IN THE LIKELIHOOD THAT ASBESTOS OR OTHER CONTAMINATED CONTAINING MATERIALS MAY BE PRESENT, EXERCISE APPROPRIATE CAUTION AND TREAT IN ACCORDANCE WITH WHS REGULATIONS AND THE EPA CONTAMINATED LAND MANAGEMENT REGULATION.

AMENDMENTS			
No.	DETAIL	DATE	CHECKED

DESIGNED / DRAWN Date:
DESIGN CHECKED & APPROVED Date:
MANAGER CAPITAL PROJECTS Date:

Scale: N.T.S **FINAL**
ASSET OWNER Date:
GROUP MANAGER CITY ASSETS & ENVIRONMENT Date:

CITY OF PARRAMATTA COUNCIL

HEADWALLS
FOR PIPES UP TO 900 DIAMETER

PLAN, ELEVATION, SECTION, TABLE AND NOTES

PLAN N° DS36
Sheet No : 1
Revision :

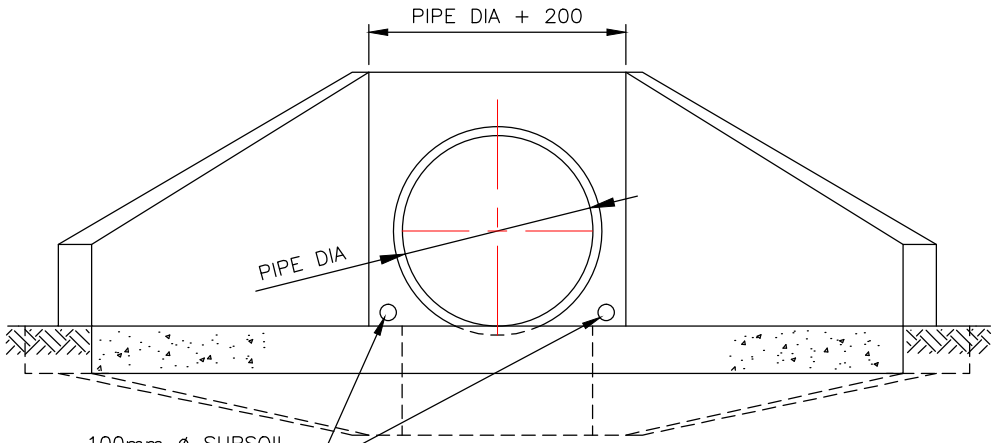

SECTIONAL ELEVATION A

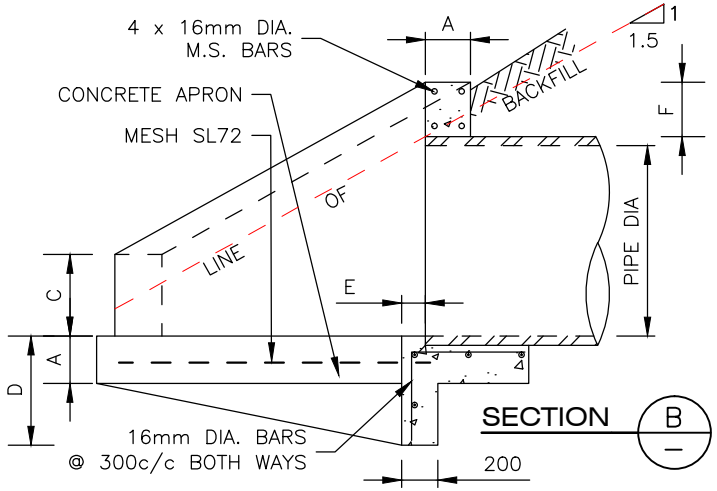

SECTION B

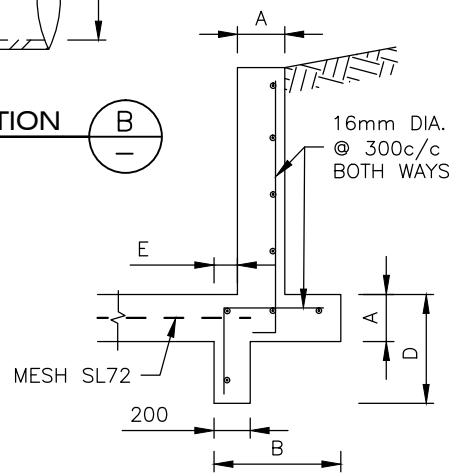

SECTION C

DIMENSIONS FOR HEADWALLS

PIPE DIA.	W	A	B	C	D	E	F	VOLUME * CU. METRES
1050	2100	260	700	450	600	130	300	3.42
1200	2400	260	700	450	600	130	300	3.99
1350	2700	260	700	525	700	130	300	4.78
1500	3000	260	700	525	700	130	300	5.43
1650	3300	260	800	550	730	130	400	6.48
1800	3600	260	900	600	760	130	400	7.56

* VOLUMES OF CONCRETE ARE APPROXIMATE ONLY.

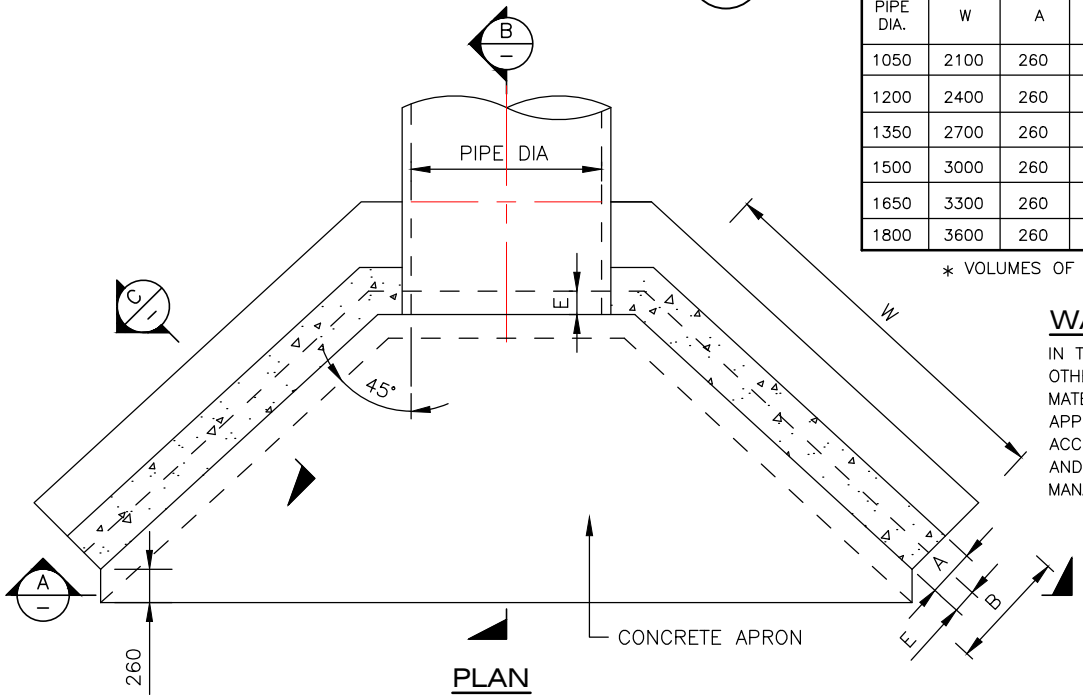

PLAN

WARNING

IN THE LIKELIHOOD THAT ASBESTOS OR OTHER CONTAMINATED CONTAINING MATERIALS MAY BE PRESENT, EXERCISE APPROPRIATE CAUTION AND TREAT IN ACCORDANCE WITH WHS REGULATIONS AND THE EPA CONTAMINATED LAND MANAGEMENT REGULATION.

NOTES

1. 12mm BARS TO HAVE A MINIMUM LAP LENGTH OF 400mm.
2. MINIMUM COVER TO ALL PIPES TO BE 600mm UNDER ROADS AND 450mm ELSEWHERE.
3. CONCRETE TO BE A MINIMUM OF N32 IN ACCORDANCE WITH AS 1012, AS 1379–2007 (R2017) AND AS 3600:2018.
4. SELECTED GRANULAR MATERIAL BACKFILL SHALL BE PLACED TO FILL ALL EXCAVATED VOIDS. REFER TO AS / NZS 3725:2007.
5. WHERE DIRECTED PROVIDE 100mmø SUBSOIL DRAINAGE PIPE/AGLINE 3.0m LONG WRAPPED IN FABRIC SOCK PLACED ADJACENT TO INLET PIPES ON BOTH SIDES AND 100mm MINIMUM ABOVE PIT FLOOR. SURROUND SUBSOIL DRAINAGE/AGLINE WITH 10mm AGGREGATE.
6. FOR DOWNSTREAM PROTECTION DETAILS REFER TO COUNCIL STANDARD DRAWING DS18.
7. ALL DIMENSIONS ARE IN MILLIMETRES UNLESS STATED OTHERWISE.

AMENDMENTS			
No.	DETAIL	DATE	CHECKED

DESIGNED / DRAWN Date:

DESIGN CHECKED & APPROVED Date:

MANAGER CAPITAL PROJECTS Date:

Scale: N.T.S **FINAL**

ASSET OWNER Date:

GROUP MANAGER CITY ASSETS & ENVIRONMENT Date:

CITY OF PARRAMATTA COUNCIL

HEADWALLS

FOR PIPES 1050 TO 1800 DIAMETER

PLAN, ELEVATION, SECTIONS, TABLE AND NOTES

PLAN N° DS36

Sheet No : 2

Revision :

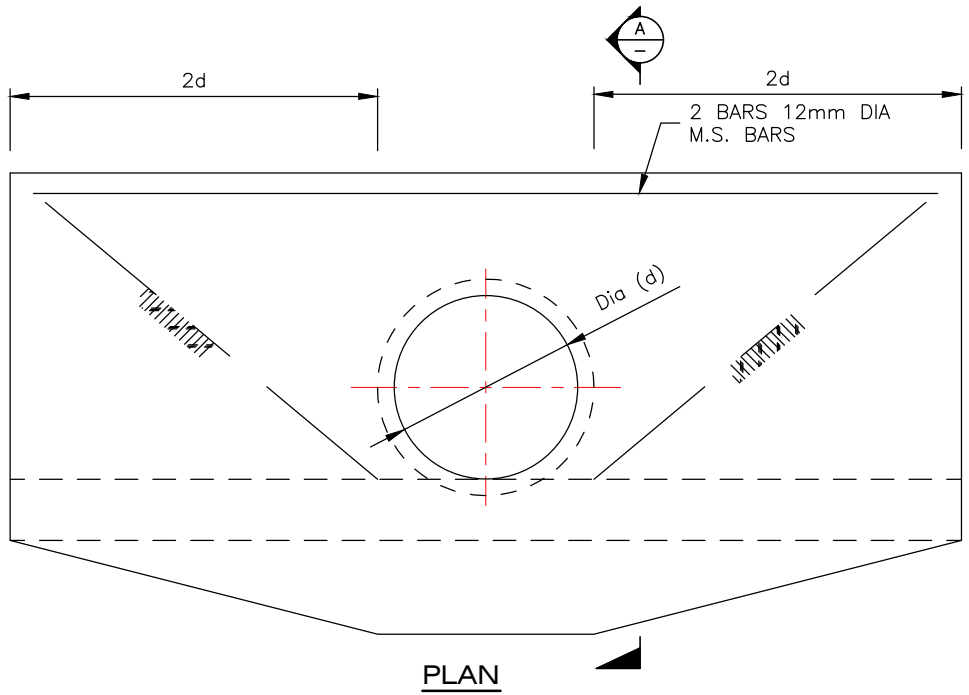

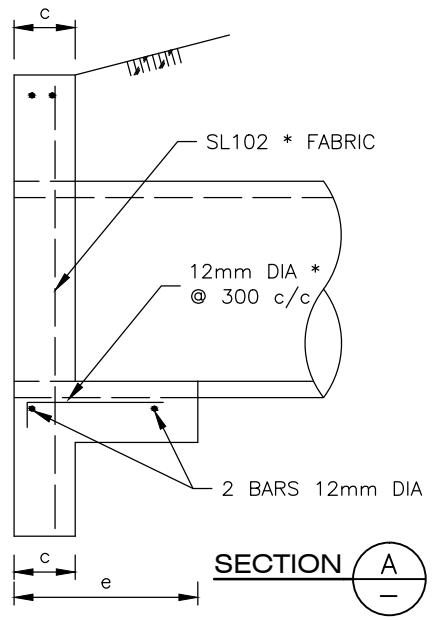

Dia d	a	b	c	e
300	300	300	150	450
375	"	"	"	"
450	"	"	"	"
525	"	"	"	"
600	"	400	175	500
675	"	"	"	"
750	"	500	200	550
825	"	"	"	"
900	"	500	225	600
1050	"	600	260	700
1200	"	700	"	"
1350	"	"	"	"
1500	400	"	"	"
1650	"	750	"	800
1800	"	800	"	900

NOTES

1. REINFORCEMENT MARK THUS * IS TO BE USED FOR PIPES WITH A DIAMETER GREATER THAN 900mm.
2. MINIMUM COVER TO ALL PIPES TO BE 600mm UNDER ROADS AND 450mm ELSEWHERE.
3. CONCRETE TO BE A MINIMUM OF N32 IN ACCORDANCE WITH AS 1012, AS 1379–2007 (R2017) AND AS 3600:2018.
4. SELECTED GRANULAR MATERIAL BACKFILL SHALL BE PLACED TO FILL ALL EXCAVATED VOIDS. (REFER TO AS / NZS 3725:2007)
5. WHERE DIRECTED PROVIDE 100mmø SUBSOIL DRAINAGE PIPE/AGLINE 3.0m LONG WRAPPED IN FABRIC SOCK PLACED ADJACENT TO INLET PIPES ON BOTH SIDES AND 100mm MINIMUM ABOVE PIT FLOOR. SURROUND SUBSOIL DRAINAGE/AGLINE WITH 10mm AGGREGATE.
6. ALL DIMENSIONS ARE IN MILLIMETRES UNLESS STATED OTHERWISE.

WARNING

IN THE LIKELIHOOD THAT ASBESTOS OR OTHER CONTAMINATED CONTAINING MATERIALS MAY BE PRESENT, EXERCISE APPROPRIATE CAUTION AND TREAT IN ACCORDANCE WITH WHS REGULATIONS AND THE EPA CONTAMINATED LAND MANAGEMENT REGULATION.

NOTE:
SUBJECT TO APPROVAL BY COUNCIL PRIOR TO USE

AMENDMENTS			
No.	DETAIL	DATE	CHECKED

DESIGNED / DRAWN Date:
DESIGN CHECKED & APPROVED Date:
MANAGER CAPITAL PROJECTS Date:

Scale: N.T.S **FINAL**
ASSET OWNER Date:
GROUP MANAGER CITY ASSETS & ENVIRONMENT Date:

CITY OF PARRAMATTA COUNCIL

HEADWALLS
ALTERNATE DETAIL OF HEADWALL
PLAN, SECTION, TABLE AND NOTES

PLAN N°
DS36
Sheet No : 3
Revision :

(PAVEMENT DETAILS SPECIFIED ON DESIGN)

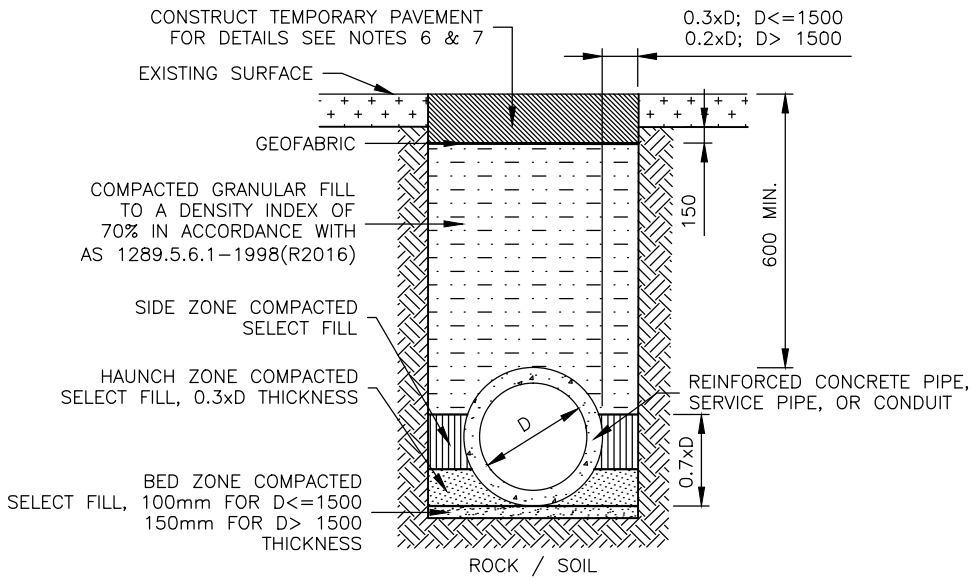

INSTALLATION AND BACKFILL DETAILS FOR PIPES

- UNDER ROAD PAVEMENT, CONCRETE FOOTPAVING AND VEHICULAR CROSSINGS (DRIVEWAYS)

NOTES

1. INSTALLATION IS TO CONFORM WITH THE REQUIREMENT OF AS / NZS 3725:2007 FOR TYPE HS3 SUPPORT.
2. FOR CONCRETE PAVEMENTS BACKFILL IS TO BE LOW STRENGTH 5MPa CONCRETE OR 14:1 SAND:CEMENT MIX.
3. BEDDING IS TO COMPLY WITH THE REQUIREMENTS OF ANY APPROVAL GIVEN BY A PUBLIC UTILITY AUTHORITY.
4. MINIMUM COVER OF 600mm SHALL BE PROVIDED TO ALL PIPELINES, INCLUDING SERVICES CONDUITS. SPECIFIC APPROVAL WILL BE REQUIRED FROM COUNCIL TO VARY THIS REQUIREMENT.
5. CONCRETE VEHICULAR CROSSINGS SHALL BE SAWCUT ONCE ONLY (ALONG NEAREST JOINT) AND RESTORED TO LEAVE TWO SECTIONS ONLY.
6. TEMPORARY PAVEMENT FOR ROADWAY AND VEHICULAR CROSSING (DRIVEWAY) RESTORATION SHALL CONSIST OF 30–50mm BITUMINOUS COLD MIX OVER COMPACTED FINE CRUSHED ROCK (GRADED TO DGB20). TOTAL ROADWAY PAVEMENT THICKNESS IS TO BE EQUIVALENT TO THE EXISTING PAVEMENT THICKNESS PLUS 150mm (300mm MIN. THICKNESS SHALL APPLY).
7. TEMPORARY PAVEMENT FOR FOOTPAVING SHALL CONSIST OF 30–50mm BITUMINOUS COLD MIX OVER 100mm (MIN. THICKNESS) OF COMPACTED FINE CRUSHED ROCK (GRADED TO DGB20).
8. ALL DIMENSIONS ARE IN MILLIMETRES UNLESS OTHERWISE SHOWN.

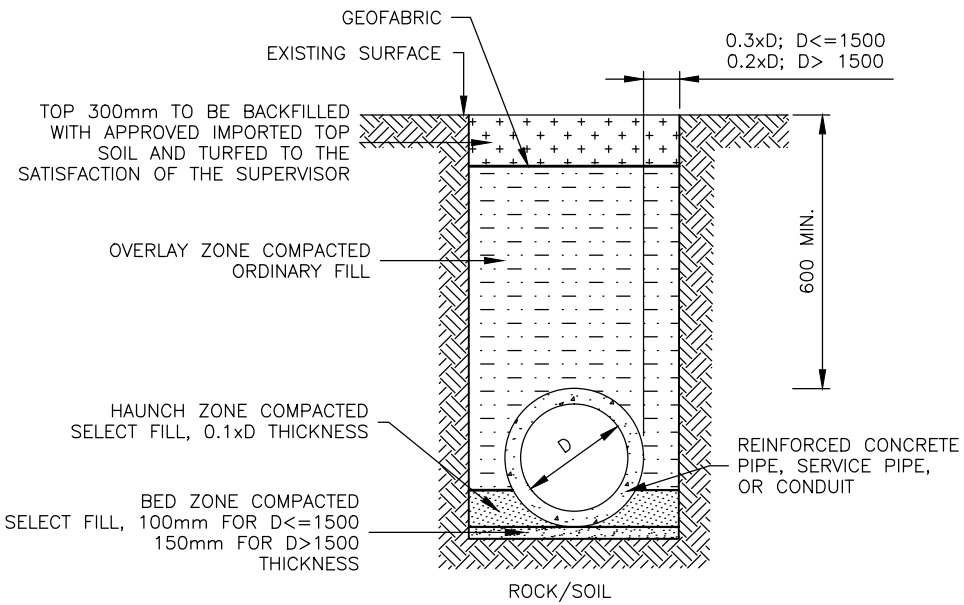

INSTALLATION AND BACKFILL DETAILS FOR PIPES

- UNDER UNPAVED AREAS IN PARKS / RESERVES / FOOTWAYS

NOTES

1. INSTALLATION IS TO CONFORM WITH THE REQUIREMENT OF AS / NZS 3725:2007 FOR TYPE HS1 SUPPORT.
2. ALL DIMENSIONS ARE IN MILLIMETRES UNLESS OTHERWISE SHOWN.

WARNING

IN THE LIKELIHOOD THAT ASBESTOS OR OTHER CONTAMINATED CONTAINING MATERIALS MAY BE PRESENT, EXERCISE APPROPRIATE CAUTION AND TREAT IN ACCORDANCE WITH WHS REGULATIONS AND THE EPA CONTAMINATED LAND MANAGEMENT REGULATION.

AMENDMENTS			
No.	DETAIL	DATE	CHECKED

DESIGNED / DRAWN Date:
DESIGN CHECKED & APPROVED Date:
MANAGER CAPITAL PROJECTS Date:

Scale: N.T.S **FINAL**
ASSET OWNER Date:
GROUP MANAGER CITY ASSETS & ENVIRONMENT Date:

CITY OF PARRAMATTA COUNCIL

INSTALLATION OF PIPELINES AND RESTORATION OF TRENCHES

DRAINAGE PIPE – SECTIONS AND NOTES

PLAN N° DS37
Sheet No : 1
Revision :

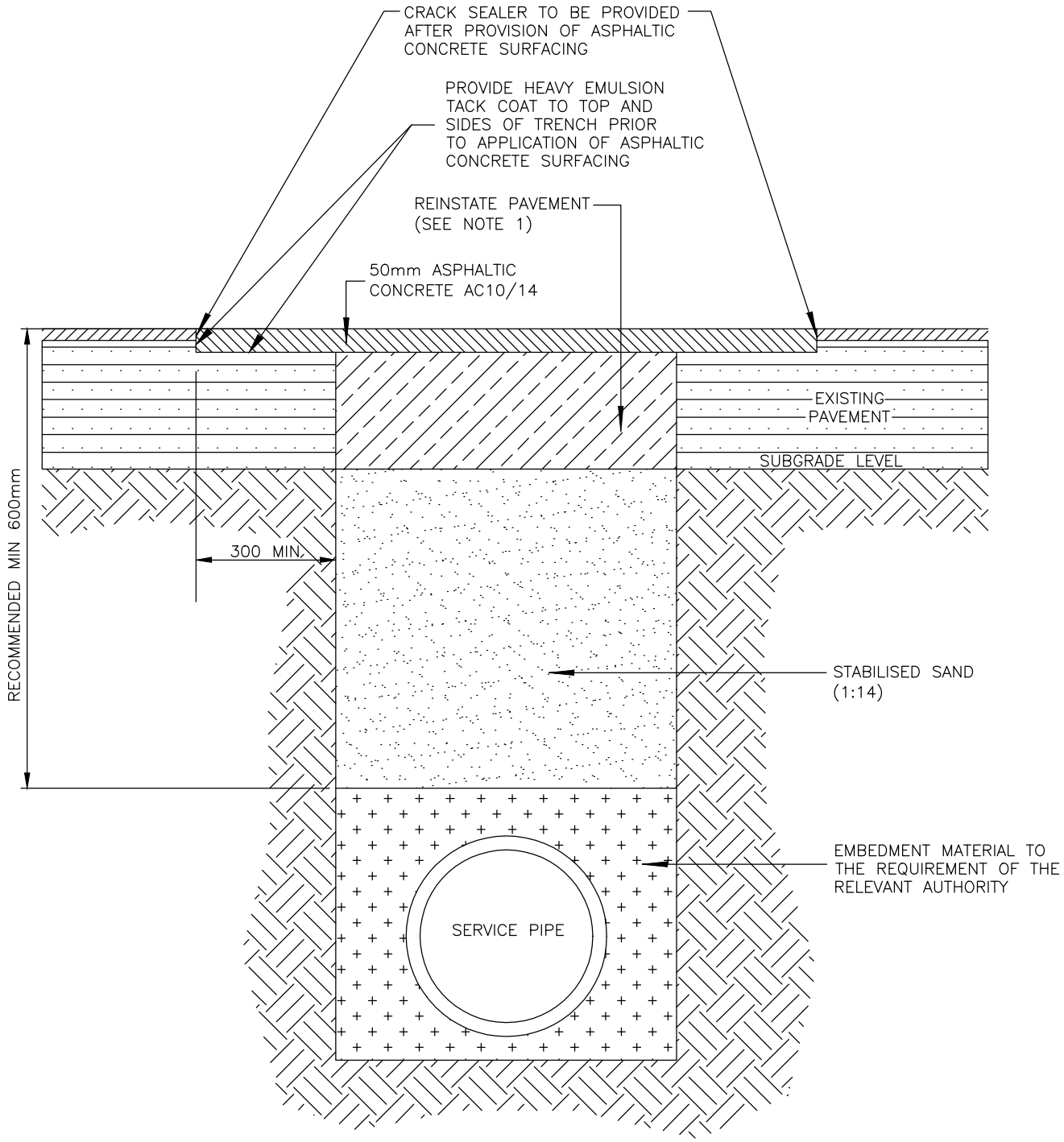

NOTE 1:

REINSTATE PAVEMENT – MATCH EXISTING PAVEMENT TYPE AND THICKNESS OR APPLY THE FOLLOWING MINIMUM THICKNESS, WHICHEVER IS THICKER UNLESS OTHERWISE INSTRUCTED BY COUNCIL'S ENGINEER:

- ASPHALT PAVEMENT; MINIMUM 150mm AC20 IN TWO LAYERS IN ACCORDANCE TO AUS SPEC 1144 (ROADWAYS) OR RMS SPEC R116 (HEAVY DUTY DENSE GRADED ASPHALT)
- STABILISED PAVEMENT: 225mm STABILISED MATERIAL CONSTRUCTED IN ONE LAYER (AUS SPEC 1141 FLEXIBLE PAVEMENT BASE AND SUBBASE) (UCS=1.5–3MPa)
- UNBOUND GRANULAR PAVEMENT: 250mm OF DGB20 IN TWO LAYERS (AUS SPEC 1141 FLEXIBLE PAVEMENT BASE AND SUBBASE)

WARNING

IN THE LIKELIHOOD THAT ASBESTOS OR OTHER CONTAMINATED CONTAINING MATERIALS MAY BE PRESENT, EXERCISE APPROPRIATE CAUTION AND TREAT IN ACCORDANCE WITH WHS REGULATIONS AND THE EPA CONTAMINATED LAND MANAGEMENT REGULATION.

DESIGNED / DRAWN Date:	Scale: N.T.S. FINAL	CITY OF PARRAMATTA COUNCIL	PLAN N°
DESIGN CHECKED & APPROVED Date:	ASSET OWNER Date:	INSTALLATION OF PIPELINES AND RESTORATION OF TRENCHES	DS37
MANAGER CAPITAL PROJECTS Date:	GROUP MANAGER CITY ASSETS & ENVIRONMENT Date:	FOR SERVICE PIPES – RESIDENTIAL STREET SECTION AND NOTE	Sheet No : 2 Revision :

SPECIFICATION NOTES:
RAG BOLT FOOTING AND LIGHT POLE SPECIFICATION

PRELIMINARIES:
- PRIOR TO COMMENCING THE PROJECT THE CONTRACTOR IS TO LOCATE ALL SERVICES IN AREAS WHERE EXCAVATION IS TO OCCUR.
- A TRAFFIC CONTROL PLAN IS TO BE PREPARED AND APPROVED BY THE RTA PRIOR TO WORK COMMENCING.
- ALL EXISTING LIGHTING IS NOT TO BE DISCONNECTED AND REMOVED UNTIL NEW LIGHTING IS FUNCTIONAL AND FULLY OPERATIONAL
- RAG BOLT ASSEMBLY AND LIGHT COLUMN TYPES ARE TO BE READ IN CONJUNCTION WITH APPROVED INTEGRAL ENERGY LIGHTING/ELECTRICAL PLANS AND SPECIFICATIONS.

LIGHT COLUMN AND OUTREACH MANUFACTURER:
THE LIGHT COLUMNS, OUTREACHES AND RAG BOLTS ARE TO BE SOURCED AND FABRICATED FROM INGAL EPS (CONTACT: SANDY PHILLIPS: 9933 4666)

LIGHT COLUMN AND OUTREACH TYPES (See 'INGAL EPS' drawings Sheet 2):
SINGLE ARMED LIGHT COLUMN (NO BANNER ARM)
- IESL85FR–A282PC 8.5m SLIMLINE TAPERED POLE
- IE20SOREDNPC 2.0M SINGLE OUTREACH

SINGLE ARMED LIGHT COLUMN (WITH BANNER ARM)
- IESL85FR–A427PC 8.5m SLIMLINE TAPERED POLE
- IE20SOREDNPC 2.0M SINGLE OUTREACH

DOUBLE ARMED LIGHT COLUMN (NO BANNER ARM)
- IESL85FR–A282PC 8.5m SLIMLINE TAPERED POLE
- IE20DOREDN–A427–PC 2.0M DOUBLE OUTREACH

DOUBLE ARMED LIGHT COLUMN (WITH BANNER ARM)
- IESL85FR–A427PC 8.5m SLIMLINE TAPERED POLE
- IE20DOREDN–A427–PC 2.0M DOUBLE OUTREACH

NOTE: ALL COLUMNS AND OUTREACHES ARE TO BE POWDERCOATED IN DULUX 'PRECIOUS SILVER PEARL'

RAG BOLTS:
RAG BOLTS ARE TO BE SOURCED FROM INGAL EPS. CONFIRM RAG BOLT SIZE WITH INGAL EPS AND INTEGRAL ENERGY. ENSURE RAGBOLT TYPE AND SIZE CONFORM TO INTEGRAL ENERGY REQUIREMENTS.
PLACE RAGBOLTS INTO 600mm DIAMETER X 1500mm DEPTH 25MPa STRENGTH CONCRETE FOOTING. REFER TO DETAIL TYPES 2–5.

CONDUITS:
INSTALL 50mm DIAMETER CONDUITS WITH LARGE RADIUS BENDS AS REQUIRED. CUT OFF CONDUITS FLUSH WITH BASE OF COLUMN. REFER TO ADJACENT DETAILS AND ANY ASSOCIATED APPROVED LIGHTING/ELECTRICAL CONSULTANTS PLANS.

TIMBER POLE WITH PAVEMENT - TYPE 1:
PAVEMENT TO FINISH 100mm FROM TIMBER POLE. SAWCUT PAVEMENT IN A STRAIGHT NEAT SQUARE CUT AROUND TIMBER POLE. INFILL BETWEEN PAVEMENT AND TIMBER POLE WITH AC10 ASPHALTIC CONCRETE WITH BORAL SURFACE COAT. FINISH FLUSH WITH PAVEMENT. MASK EDGE OF PAVEMENT WITH A MASKING TAPE OR SIMILAR TO ENSURE A NEAT CLEAN EDGE BETWEEN PAVEMENT AND ASPHALT.
REFER TO DETAIL 'TYPE 1'.

SURFACE MOUNTED COLUMN WITH PAVERS - TYPE 2:
COLUMN BASE PLATE TO FINISH MINIMUM 100mm ABOVE TOP OF PAVEMENT LEVEL. PAVERS TO FINISH FLUSH AGAINST RAGBOLT/COLUMN. PROVIDE 10MM WIDE ABELFLEX FOAM EXPANSION JOINT BETWEEN PAVER AND RAGBOLT/COLUMN. CUT PAVERS TO SUIT. MINIMUM PAVER WIDTH IS TO BE 100mm AS TO AVOID SLITHERS. FILL GAP BETWEEN BOTTOM OF BASE PLATE AND PAVER WITH NON SHRINK HIGH STRENGTH GROUT (COLOUR: GREY–TO MATCH LIGHT POLE COLOUR) AT RIGHT ANGLES BETWEEN UNDERSIDE OF BASE PLATE AND TOP OF PAVER. ENSURE A SMOOTH UNIFORM GROUT FINISH.
REFER TO DETAIL 'TYPE 2'.

SURFACE MOUNTED COLUMN WITH ASPHALT - TYPE 3:
COLUMN BASE PLATE TO FINISH MINIMUM 100mm ABOVE TOP OF PAVEMENT LEVEL. ASPHALT TO FINISH FLUSH AGAINST RAGBOLT/COLUMN. PROVIDE 10MM WIDE ABELFLEX FOAM EXPANSION JOINT BETWEEN ASPHALT AND RAGBOLT/COLUMN. FILL GAP BETWEEN BOTTOM OF BASE PLATE AND ASPHALT WITH NON SHRINK HIGH STRENGTH GROUT (COLOUR: GREY–TO MATCH LIGHT POLE COLOUR) AT RIGHT ANGLES BETWEEN UNDERSIDE OF BASE PLATE AND TOP OF ASPHALT PAVEMENT. ENSURE A SMOOTH UNIFORM GROUT FINISH.
REFER TO DETAIL 'TYPE 3'.

SUB-SURFACE MOUNTED COLUMN WITH PAVERS - TYPE 4:
BOTTOM OF COLUMN BASE PLATE TO FINISH MAXIMUM 100mm BELOW TOP OF PAVEMENT LEVEL. GRIND BOTTOM OF PAVERS AS NECESSARY TO ALLOW FOR ADEQUATE CLEARANCE FOR BOLTS AND BASE PLATE. CUT PAVERS TO MATCH CIRCUMFERENCE OF COLUMN ALLOWING FOR 10mm WIDE JOINT. MINIMUM PAVER WIDTH IS TO BE 100mm AS TO AVOID SLITHERS. PROVIDE FULL DEPTH 10mm WIDE ABELFLEX FOAM EXPANSION JOINT WITH 10mm WIDTH X 20mm DEPTH DYNATRED SEAL (COLOUR: GREY) BETWEEN PAVERS AND COLUMN.
REFER TO DETAIL 'TYPE 4.

SUB-SURFACE MOUNTED COLUMN WITH ASPHALT - TYPE 5:
BOTTOM OF BASE PLATE TO FINISH MAXIMUM 100mm BELOW TOP OF PAVEMENT LEVEL. PROVIDE FULL DEPTH 10mm WIDE ABELFLEX FOAM EXPANSION JOINT WITH 10mm WIDTH X 20mm DEPTH DYNATRED SEAL (COLOUR: GREY) BETWEEN ASPHALT AND COLUMN.
REFER TO DETAIL 'TYPE 5'.

CLEANING OF PAVERS AND COLUMNS:
ALL PAVERS LAID AND COLUMNS INSTALLED DURING THE COURSE OF ONE WORKING DAY MUST BE CLEANED AT THE END OF THAT DAY BEFORE PROCEEDING WITH LAYING OF SUBSEQUENT PAVERS OR INSTALLING SUBSEQUENT COLUMNS. THIS IS TO PREVENT CEMENT, ASPHALT AND SURFACE COATING RESIDUE BUILD UP ON PAVERS AND COLUMNS WHICH MAY BECOME DIFFICULT TO CLEAN IF LEFT OVERNIGHT OR FOR PROLONGED PERIODS. AN ACID WASH IS NOT TO BE USED UNLESS DIRECTED BY THE SUPERINTENDENT.

DEFECTS LIABILITY PERIOD
THE DEFECTS LIABILITY PERIOD EXTENDS FOR A PERIOD OF 12 MONTHS, FROM DATE OF SATISFACTORY COMPLETION OF THE PROJECT.

NOTE: EXISTING LIGHTING IS NOT TO BE DISCONNECTED UNTIL NEW LIGHTING IS FULLY OPERATIONAL.
NOTE: DS60 TO BE READ IN CONJUNCTION WITH ANY APPROVED INTEGRAL ENERGY LIGHTING/ELECTRICAL PLANS AND SPECIFICATION.

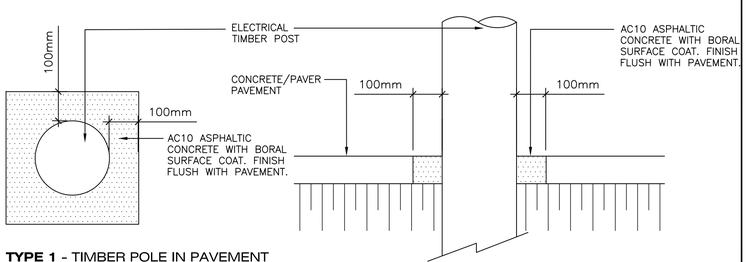

TYPE 1 - TIMBER POLE IN PAVEMENT

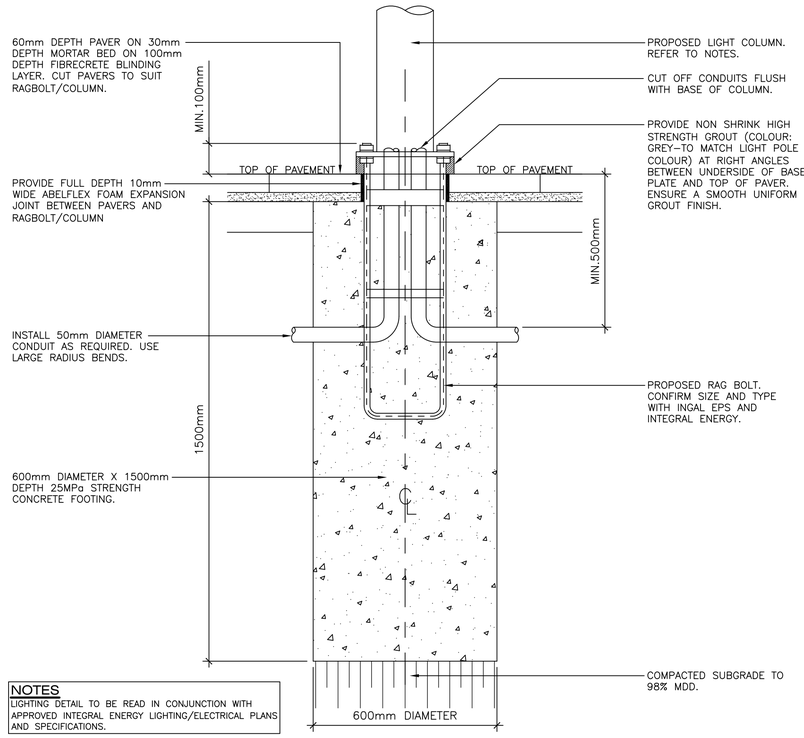

NOTES
LIGHTING DETAIL TO BE READ IN CONJUNCTION WITH APPROVED INTEGRAL ENERGY LIGHTING/ELECTRICAL PLANS AND SPECIFICATIONS.

TYPE 2 - SURFACE MOUNTED COLUMN WITH PAVERS

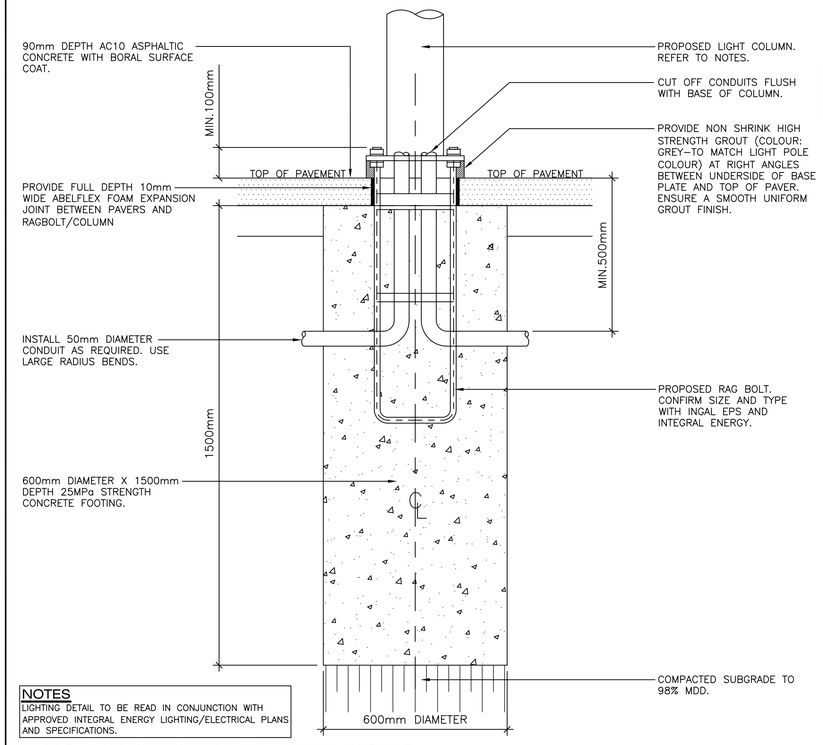

NOTES
LIGHTING DETAIL TO BE READ IN CONJUNCTION WITH APPROVED INTEGRAL ENERGY LIGHTING/ELECTRICAL PLANS AND SPECIFICATIONS.

TYPE 3 - SURFACE MOUNTED COLUMN WITH ASPHALT

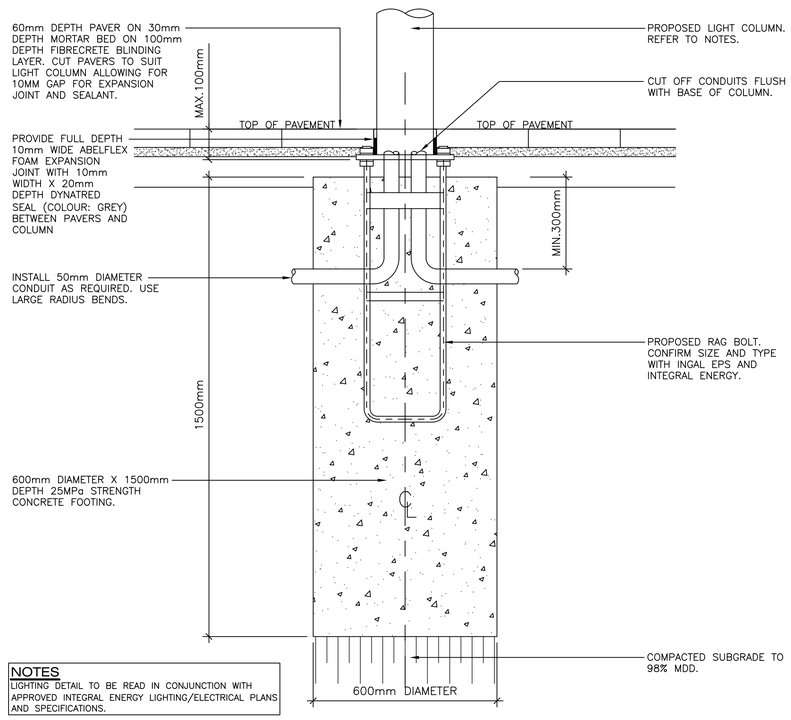

NOTES
LIGHTING DETAIL TO BE READ IN CONJUNCTION WITH APPROVED INTEGRAL ENERGY LIGHTING/ELECTRICAL PLANS AND SPECIFICATIONS.

TYPE 4 - SUB-SURFACE MOUNTED COLUMN WITH PAVERS

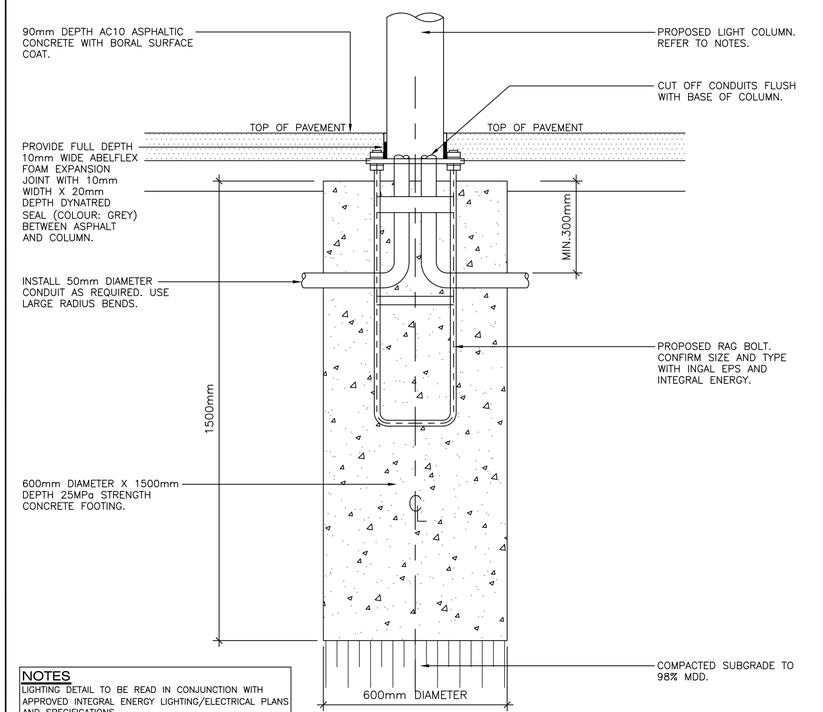

NOTES
LIGHTING DETAIL TO BE READ IN CONJUNCTION WITH APPROVED INTEGRAL ENERGY LIGHTING/ELECTRICAL PLANS AND SPECIFICATIONS.

TYPE 5 - SUB-SURFACE MOUNTED COLUMN WITH ASPHALT

AMENDMENTS		
No.	DETAIL	DATE

STATUS: **APPROVED**
Scale: N.T.S.
DESIGNED ...../...../.....
ASSET OWNER ...../...../.....
DESIGN CHECKED & APPROVED ...../...../.....
MANAGER CAPITAL PROJETS ...../...../.....

PARRAMATTA CITY COUNCIL

VEHICULAR LIGHT POLES
RAG BOLT FOOTING AND POLE TYPE

SPECIFICATION NOTES AND DETAILS

PLAN NUMBER
DS38
Sheet No : 1 of 2
Revision :

SPECIFICATION NOTES:
RAG BOLT FOOTING AND LIGHT POLE SPECIFICATION

PRELIMINARIES:
- PRIOR TO COMMENCING THE PROJECT THE CONTRACTOR IS TO LOCATE ALL SERVICES IN AREAS WHERE EXCAVATION IS TO OCCUR.
- A TRAFFIC CONTROL PLAN IS TO BE PREPARED AND APPROVED BY THE RTA PRIOR TO WORK COMMENCING.
- ALL EXISTING LIGHTING IS NOT TO BE DISCONNECTED AND REMOVED UNTIL NEW LIGHTING IS FUNCTIONAL AND FULLY OPERATIONAL
- RAG BOLT ASSEMBLY AND LIGHT COLUMN TYPES ARE TO BE READ IN CONJUNCTION WITH APPROVED INTEGRAL ENERGY LIGHTING/ELECTRICAL PLANS AND SPECIFICATIONS.

LIGHT COLUMN AND OUTREACH MANUFACTURER:
THE LIGHT COLUMNS, OUTREACHES AND RAG BOLTS ARE TO BE SOURCED AND FABRICATED FROM INGAL EPS (CONTACT: SANDY PHILLIPS: 9933 4666)

LIGHT COLUMN AND OUTREACH TYPES (See 'INGAL EPS' drawings Sheet 2):
SINGLE ARMED LIGHT COLUMN (NO BANNER ARM)
- IESL85FR-A282PC 8.5m SLIMLINE TAPERED POLE
- IE20SOREDNPC 2.0M SINGLE OUTREACH

SINGLE ARMED LIGHT COLUMN (WITH BANNER ARM)
- IESL85FR-A427PC 8.5m SLIMLINE TAPERED POLE
- IE20SOREDNPC 2.0M SINGLE OUTREACH

DOUBLE ARMED LIGHT COLUMN (NO BANNER ARM)
- IESL85FR-A282PC 8.5m SLIMLINE TAPERED POLE
- IE20DOREDN-A427-PC 2.0M DOUBLE OUTREACH

DOUBLE ARMED LIGHT COLUMN (WITH BANNER ARM)
- IESL85FR-A427PC 8.5m SLIMLINE TAPERED POLE
- IE20DOREDN-A427-PC 2.0M DOUBLE OUTREACH

NOTE: ALL COLUMNS AND OUTREACHES ARE TO BE POWDERCOATED IN DULUX 'PRECIOUS SILVER PEARL'

RAG BOLTS:
RAG BOLTS ARE TO BE SOURCED FROM INGAL EPS. CONFIRM RAG BOLT SIZE WITH INGAL EPS AND INTEGRAL ENERGY. ENSURE RAGBOLT TYPE AND SIZE CONFORM TO INTEGRAL ENERGY REQUIREMENTS.
PLACE RAGBOLTS INTO 600mm DIAMETER X 1500mm DEPTH 25MPa STRENGTH CONCRETE FOOTING. REFER TO DETAIL TYPES 2-5.

CONDUITS:
INSTALL 50mm DIAMETER CONDUITS WITH LARGE RADIUS BENDS AS REQUIRED. CUT OFF CONDUITS FLUSH WITH BASE OF COLUMN. REFER TO ADJACENT DETAILS AND ANY ASSOCIATED APPROVED LIGHTING/ELECTRICAL CONSULTANTS PLANS.

TIMBER POLE WITH PAVEMENT - TYPE 1:
PAVEMENT TO FINISH 100mm FROM TIMBER POLE. SAWCUT PAVEMENT IN A STRAIGHT NEAT SQUARE CUT AROUND TIMBER POLE. INFILL BETWEEN PAVEMENT AND TIMBER POLE WITH AC10 ASPHALTIC CONCRETE WITH BORAL SURFACE COAT. FINISH FLUSH WITH PAVEMENT. MASK EDGE OF PAVEMENT WITH A MASKING TAPE OR SIMILAR TO ENSURE A NEAT CLEAN EDGE BETWEEN PAVEMENT AND ASPHALT.
REFER TO DETAIL 'TYPE 1'.

SURFACE MOUNTED COLUMN WITH PAVERS - TYPE 2:
COLUMN BASE PLATE TO FINISH MINIMUM 100mm ABOVE TOP OF PAVEMENT LEVEL. PAVERS TO FINISH FLUSH AGAINST RAGBOLT/COLUMN. PROVIDE 10MM WIDE ABELFLEX FOAM EXPANSION JOINT BETWEEN PAVER AND RAGBOLT/COLUMN. CUT PAVERS TO SUIT. MINIMUM PAVER WIDTH IS TO BE 100mm AS TO AVOID SLITHERS. FILL GAP BETWEEN BOTTOM OF BASE PLATE AND PAVER WITH NON SHRINK HIGH STRENGTH GROUT (COLOUR: GREY-TO MATCH LIGHT POLE COLOUR) AT RIGHT ANGLES BETWEEN UNDERSIDE OF BASE PLATE AND TOP OF PAVER. ENSURE A SMOOTH UNIFORM GROUT FINISH.
REFER TO DETAIL 'TYPE 2'.

SURFACE MOUNTED COLUMN WITH ASPHALT - TYPE 3:
COLUMN BASE PLATE TO FINISH MINIMUM 100mm ABOVE TOP OF PAVEMENT LEVEL. ASPHALT TO FINISH FLUSH AGAINST RAGBOLT/COLUMN. PROVIDE 10MM WIDE ABELFLEX FOAM EXPANSION JOINT BETWEEN ASPHALT AND RAGBOLT/COLUMN. FILL GAP BETWEEN BOTTOM OF BASE PLATE AND ASPHALT WITH NON SHRINK HIGH STRENGTH GROUT (COLOUR: GREY-TO MATCH LIGHT POLE COLOUR) AT RIGHT ANGLES BETWEEN UNDERSIDE OF BASE PLATE AND TOP OF ASPHALT PAVEMENT. ENSURE A SMOOTH UNIFORM GROUT FINISH.
REFER TO DETAIL 'TYPE 3'.

SUB-SURFACE MOUNTED COLUMN WITH PAVERS - TYPE 4:
BOTTOM OF COLUMN BASE PLATE TO FINISH MAXIMUM 100mm BELOW TOP OF PAVEMENT LEVEL. GRIND BOTTOM OF PAVERS AS NECESSARY TO ALLOW FOR ADEQUATE CLEARANCE FOR BOLTS AND BASE PLATE. CUT PAVERS TO MATCH CIRCUMFERENCE OF COLUMN ALLOWING FOR 10mm WIDE JOINT. MINIMUM PAVER WIDTH IS TO BE 100mm AS TO AVOID SLITHERS. PROVIDE FULL DEPTH 10mm WIDE ABELFLEX FOAM EXPANSION JOINT WITH 10mm WIDTH X 20mm DEPTH DYNATRED SEAL (COLOUR: GREY) BETWEEN PAVERS AND COLUMN.
REFER TO DETAIL 'TYPE 4.

SUB-SURFACE MOUNTED COLUMN WITH ASPHALT - TYPE 5:
BOTTOM OF BASE PLATE TO FINISH MAXIMUM 100mm BELOW TOP OF PAVEMENT LEVEL. PROVIDE FULL DEPTH 10mm WIDE ABELFLEX FOAM EXPANSION JOINT WITH 10mm WIDTH X 20mm DEPTH DYNATRED SEAL (COLOUR: GREY) BETWEEN ASPHALT AND COLUMN.
REFER TO DETAIL 'TYPE 5'.

CLEANING OF PAVERS AND COLUMNS:
ALL PAVERS LAID AND COLUMNS INSTALLED DURING THE COURSE OF ONE WORKING DAY MUST BE CLEANED AT THE END OF THAT DAY BEFORE PROCEEDING WITH LAYING OF SUBSEQUENT PAVERS OR INSTALLING SUBSEQUENT COLUMNS. THIS IS TO PREVENT CEMENT, ASPHALT AND SURFACE COATING RESIDUE BUILD UP ON PAVERS AND COLUMNS WHICH MAY BECOME DIFFICULT TO CLEAN IF LEFT OVERNIGHT OR FOR PROLONGED PERIODS. AN ACID WASH IS NOT TO BE USED UNLESS DIRECTED BY THE SUPERINTENDENT.

DEFECTS LIABILITY PERIOD
THE DEFECTS LIABILITY PERIOD EXTENDS FOR A PERIOD OF 12 MONTHS, FROM DATE OF SATISFACTORY COMPLETION OF THE PROJECT.

NOTE: EXISTING LIGHTING IS NOT TO BE DISCONNECTED UNTIL NEW LIGHTING IS FULLY OPERATIONAL.
NOTE: DS60 TO BE READ IN CONJUNCTION WITH ANY APPROVED INTEGRAL ENERGY LIGHTING/ELECTRICAL PLANS AND SPECIFICATION.

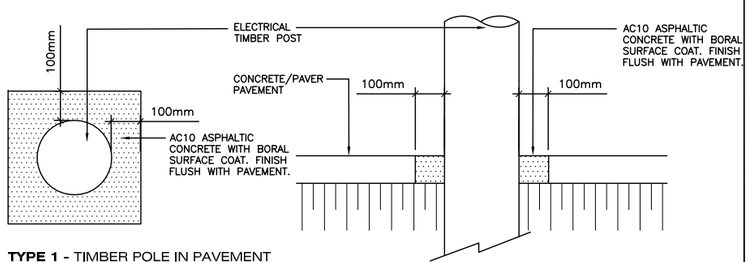

TYPE 1 - TIMBER POLE IN PAVEMENT

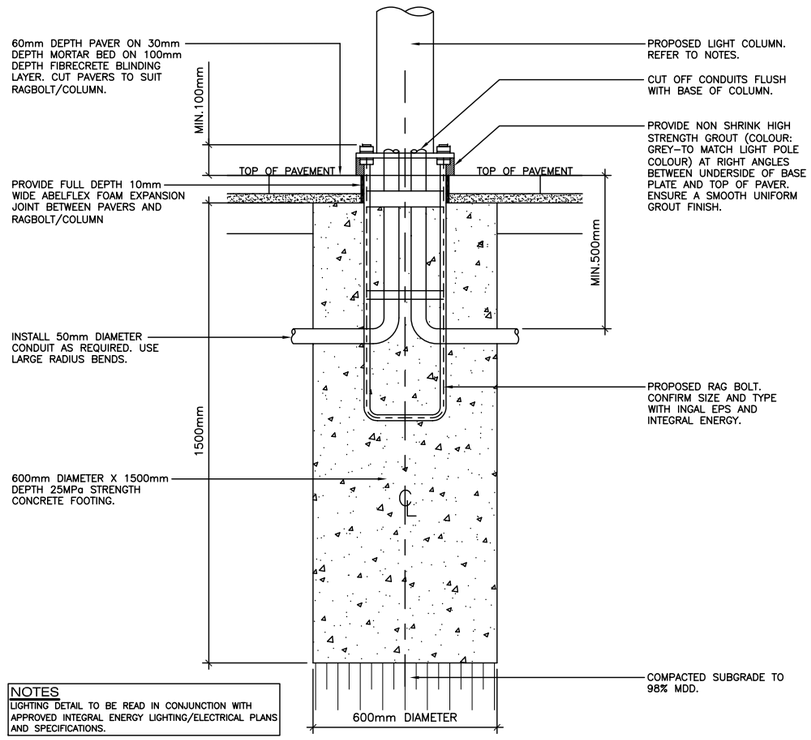

NOTES
LIGHTING DETAIL TO BE READ IN CONJUNCTION WITH APPROVED INTEGRAL ENERGY LIGHTING/ELECTRICAL PLANS AND SPECIFICATIONS.

TYPE 2 - SURFACE MOUNTED COLUMN WITH PAVERS

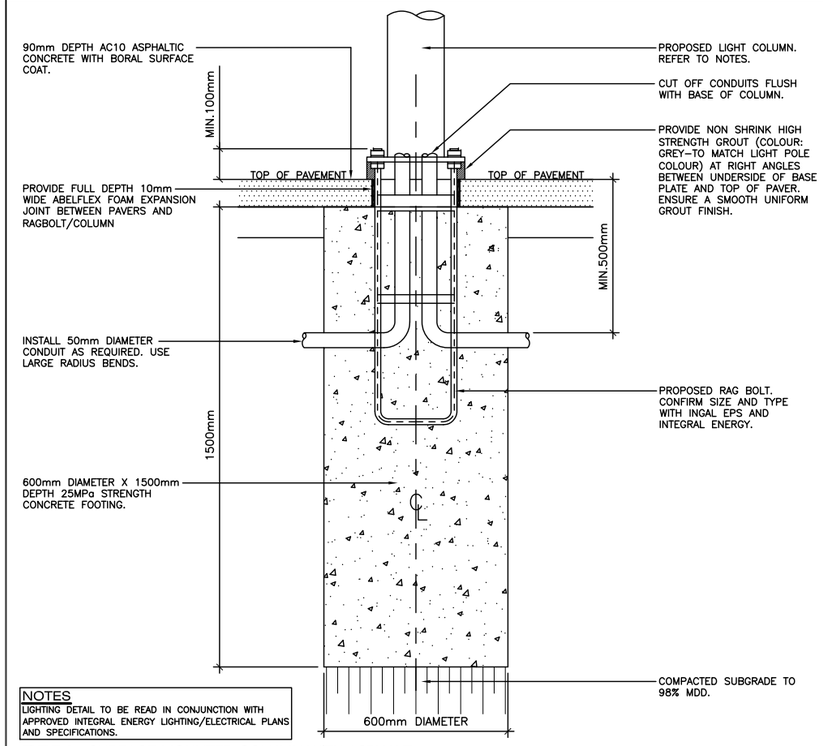

NOTES
LIGHTING DETAIL TO BE READ IN CONJUNCTION WITH APPROVED INTEGRAL ENERGY LIGHTING/ELECTRICAL PLANS AND SPECIFICATIONS.

TYPE 3 - SURFACE MOUNTED COLUMN WITH ASPHALT

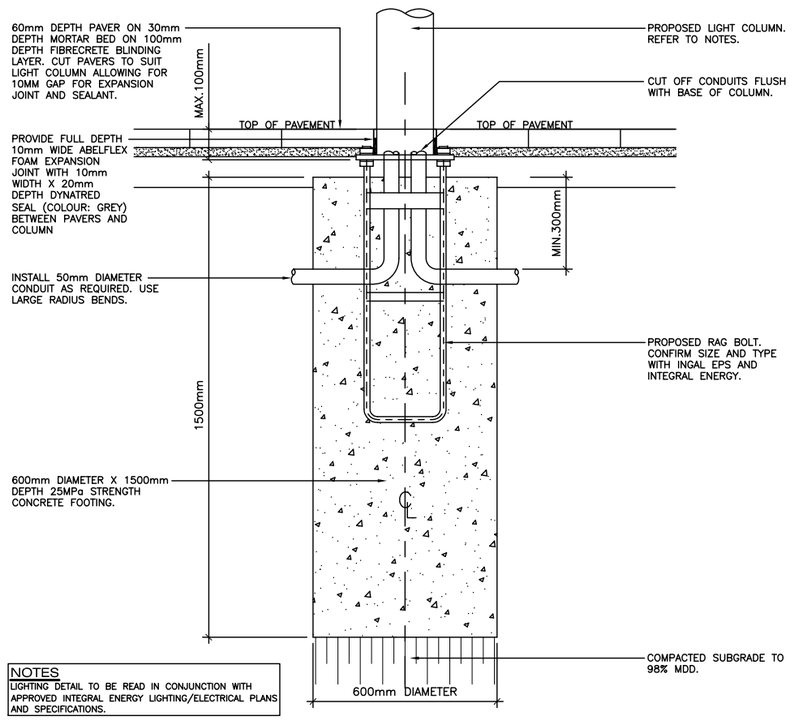

NOTES
LIGHTING DETAIL TO BE READ IN CONJUNCTION WITH APPROVED INTEGRAL ENERGY LIGHTING/ELECTRICAL PLANS AND SPECIFICATIONS.

TYPE 4 - SUB-SURFACE MOUNTED COLUMN WITH PAVERS

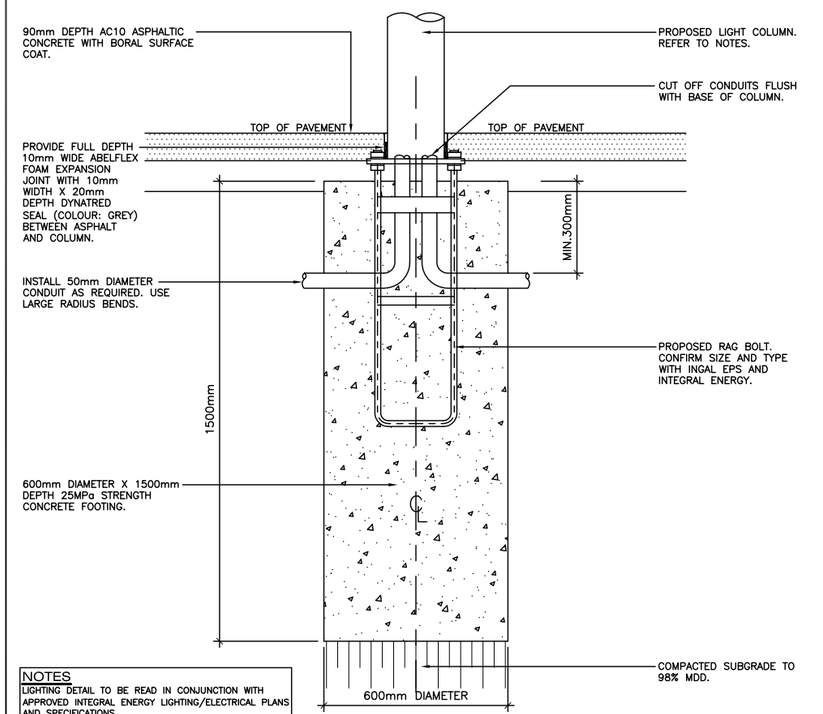

NOTES
LIGHTING DETAIL TO BE READ IN CONJUNCTION WITH APPROVED INTEGRAL ENERGY LIGHTING/ELECTRICAL PLANS AND SPECIFICATIONS.

TYPE 5 - SUB-SURFACE MOUNTED COLUMN WITH ASPHALT

AMENDMENTS		
No.	DETAIL	DATE

STATUS: **APPROVED**
Scale: N.T.S.
DESIGNED ..../...../.....
ASSET OWNER ..../...../.....
DESIGN CHECKED & APPROVED ..../...../.....
MANAGER CAPITAL PROJETS ..../...../.....

PARRAMATTA CITY COUNCIL

VEHICULAR LIGHT POLES
RAG BOLT FOOTING AND POLE TYPE

SPECIFICATION NOTES AND DETAILS

PLAN NUMBER
DS38
Sheet No : 1 of 2
Revision :

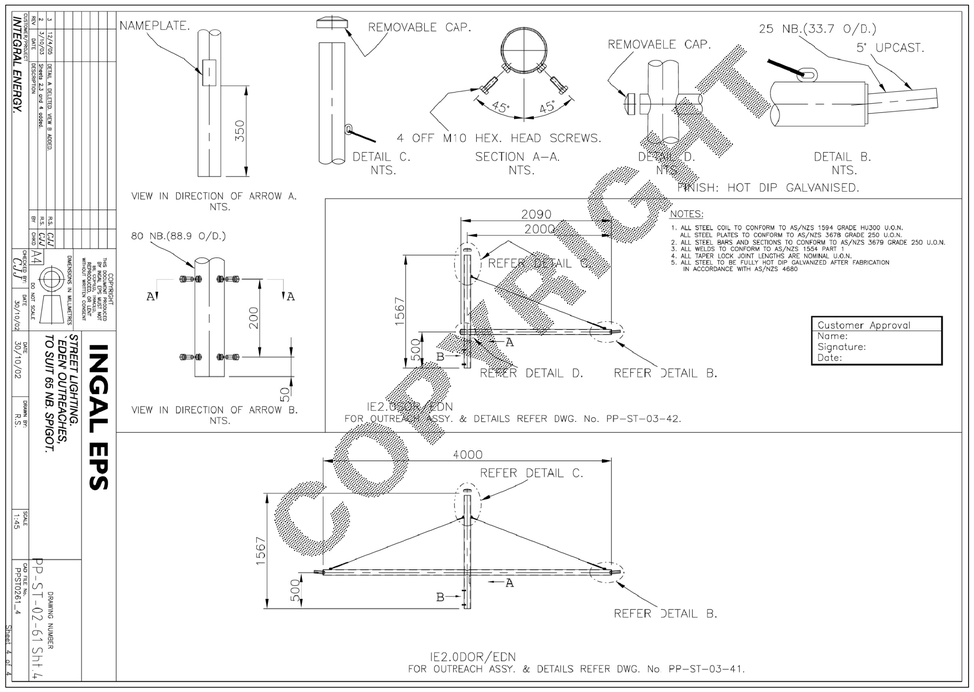

DETAIL 1 - STANDARD 2.0m DOUBLE AND SINGLE ARM OUTREACH

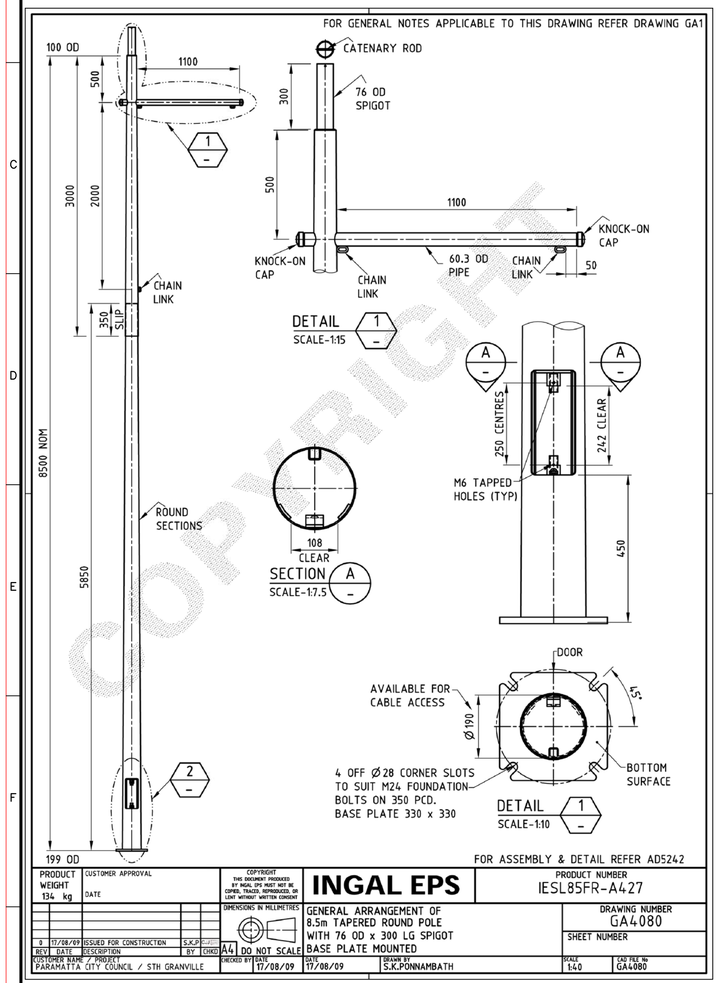

DETAIL 2 - 8.5m HIGH SLIMLINE TAPERED POLE WITH BANNER ARM

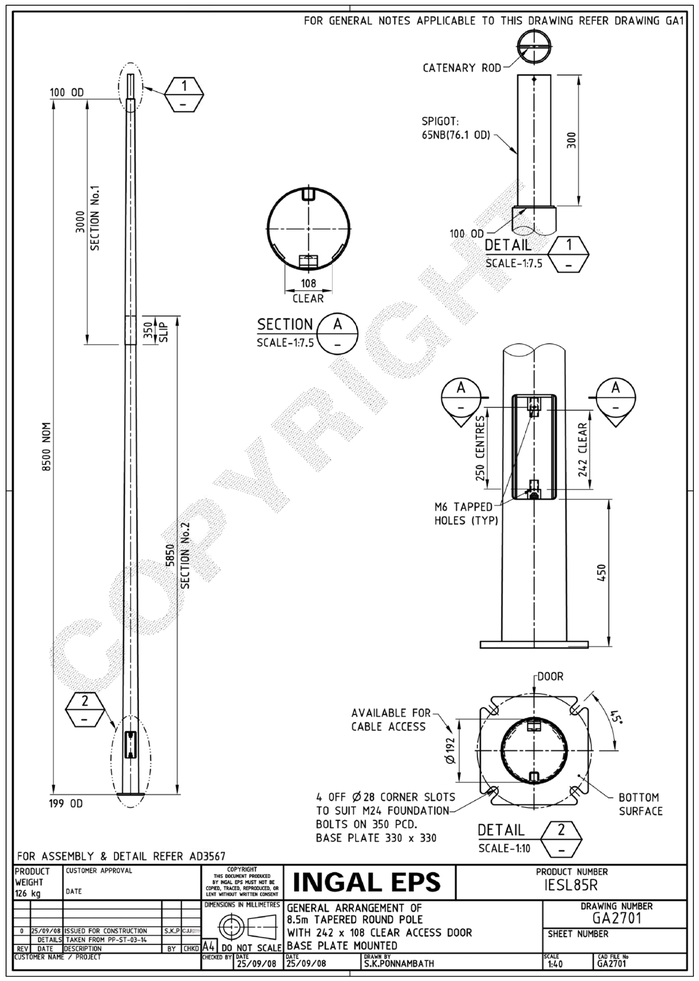

DETAIL 3 - 8.5m HIGH SLIMLINE TAPERED POLE WITH NO BANNER ARM

AMENDMENTS		
No.	DETAIL	DATE

STATUS: **APPROVED**

Scale: N.T.S.

DESIGNED ...../...../.....

ASSET OWNER ...../...../.....

DESIGN CHECKED & APPROVED ...../...../.....

MANAGER CAPITAL PROJETS ...../...../.....

PARRAMATTA CITY COUNCIL

VEHICULAR LIGHT POLES
RAG BOLT FOOTING AND POLE TYPE

SPECIFICATION NOTES AND DETAILS

PLAN NUMBER
DS38

Sheet No : 2 of 2

Revision :

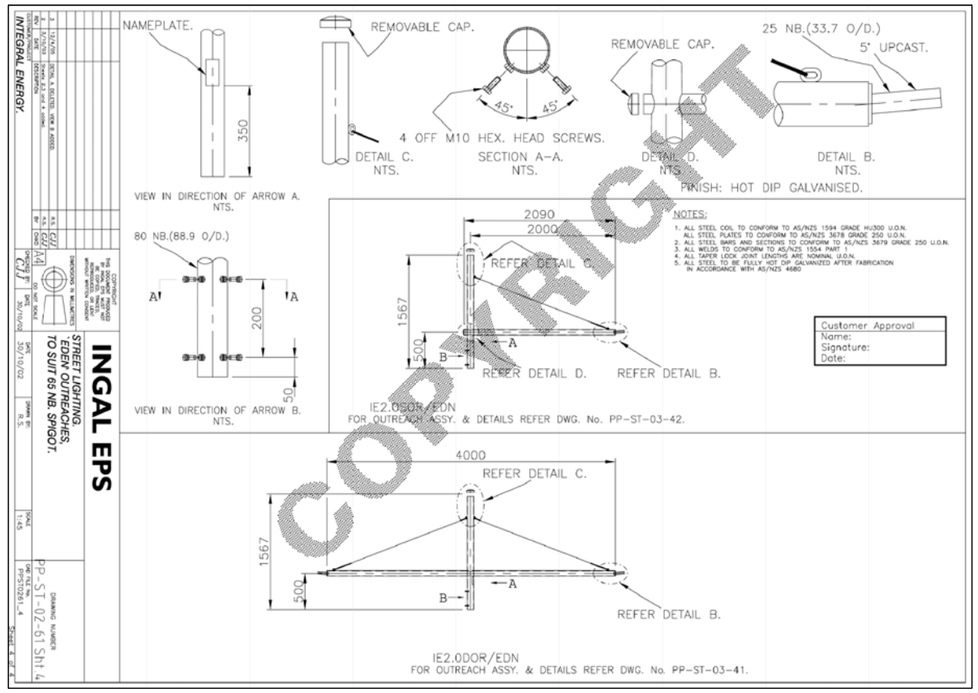

DETAIL 1 - STANDARD 2.0m DOUBLE AND SINGLE ARM OUTREACH

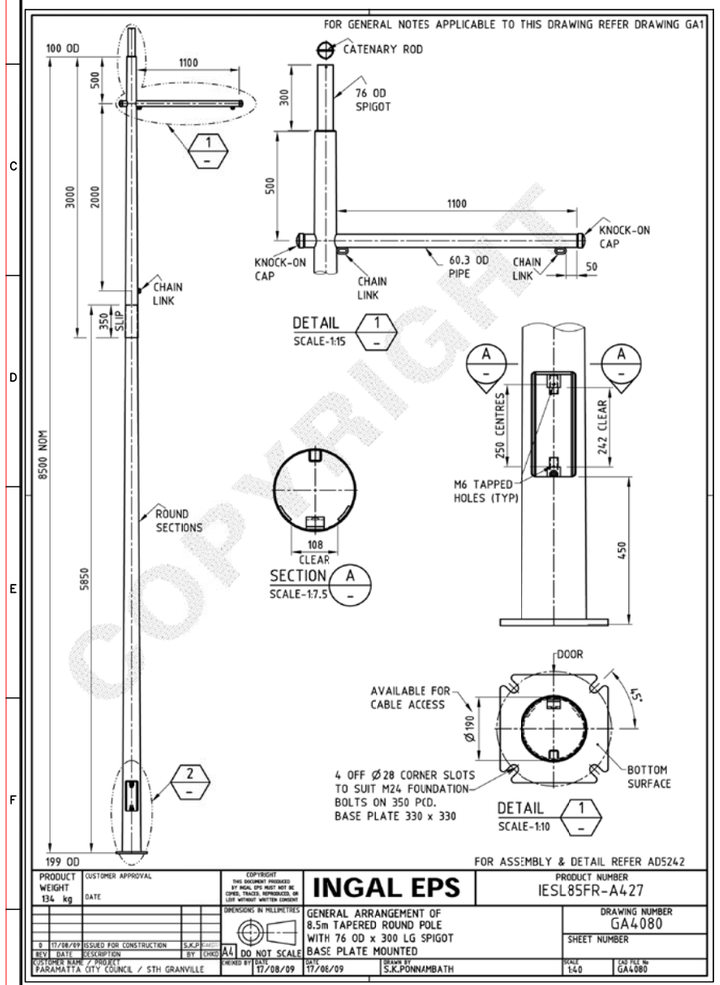

DETAIL 2 - 8.5m HIGH SLIMLINE TAPERED POLE WITH BANNER ARM

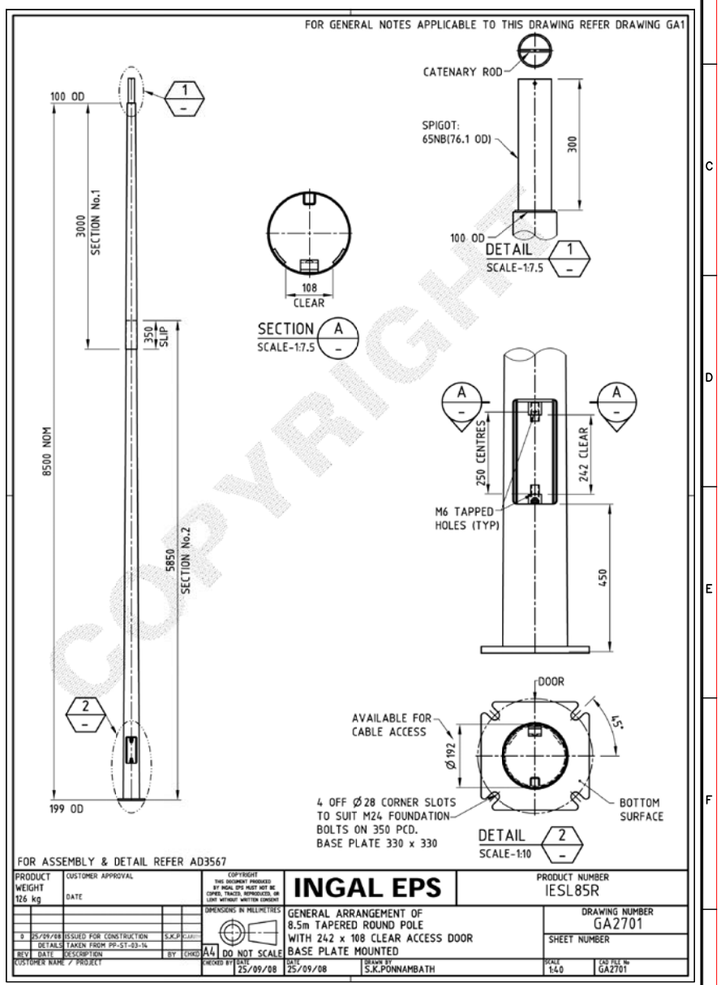

DETAIL 3 - 8.5m HIGH SLIMLINE TAPERED POLE WITH NO BANNER ARM

AMENDMENTS		
No.	DETAIL	DATE

STATUS: **APPROVED**

Scale: N.T.S.

DESIGNED ...../...../.....

ASSET OWNER ...../...../.....

DESIGN CHECKED & APPROVED ...../...../.....

MANAGER CAPITAL PROJETS ...../...../.....

PARRAMATTA CITY COUNCIL

VEHICULAR LIGHT POLES
RAG BOLT FOOTING AND POLE TYPE

SPECIFICATION NOTES AND DETAILS

PLAN NUMBER
DS38

Sheet No : 2 of 2

Revision :

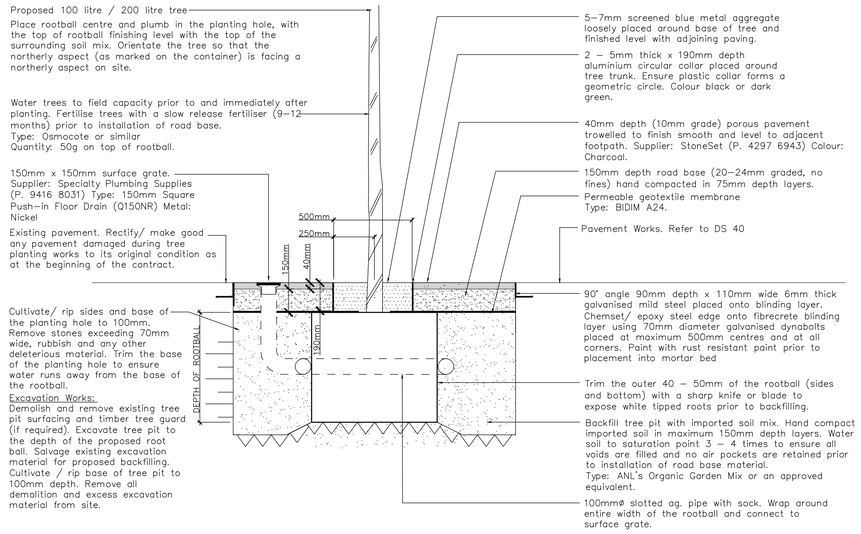

Detail 1: Typical section parallel with kerb

SCALE 1:20

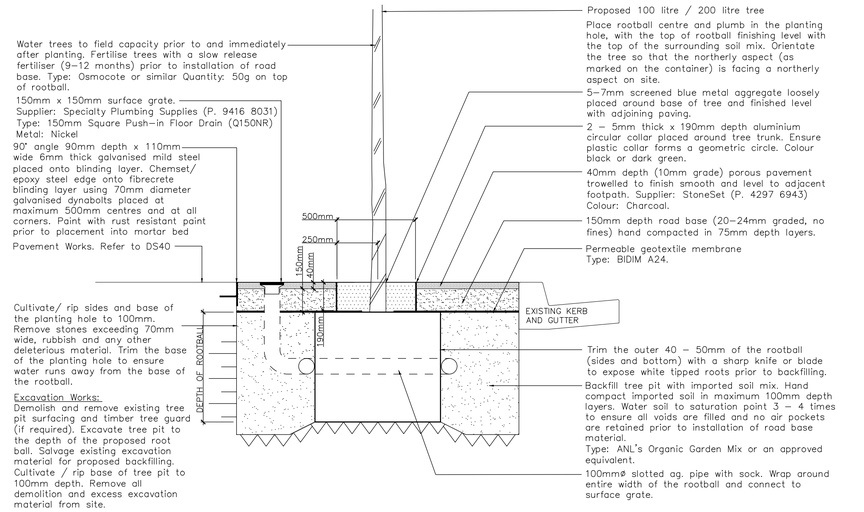

Detail 2: Typical section perpendicular to kerb

SCALE 1:20

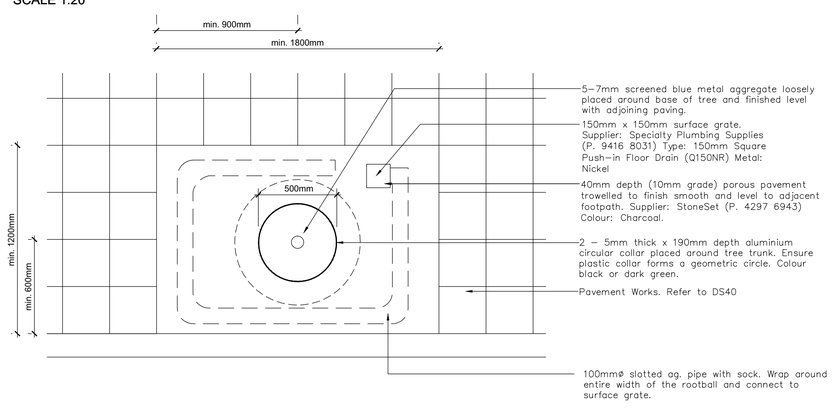

Detail 3: Typical plan of street tree

SCALE 1:20

TREE PLANTING SPECIFICATION NOTES:

Tree Selection:

1. Trees shall be self-supporting with a well formed straight stem/trunk. Circumference of stem/trunk shall be adequate to support the tree without the aid of stakes. Remove all existing stakes and ties from tree at time of planting. The trunks/stems should be strong and straight.
2. The caliper of the stem / trunk shall taper or reduce at any higher point along the stem / trunk.
3. Trees shall show an apical dominant (central leader) with the apical bud intact for species with a main stem/trunk (excurrent) form.
4. The stem/trunk should be positioned in the centre of the bag/pot.
5. Trees shall possess a well structured crown/canopy and show a natural form true to the species type. The crown symmetry shall look balanced and even.
6. The stem/trunk shall be clearly defined and cleared of lower branches. A clear stem/trunk shall be at least 25% of the total tree height.
7. Foliage colour and texture should be consistent for the species type.
8. Trees should show signs of consistent growth for the species type.
9. Trees shall be free of active pests and diseases at time of planting.
10. Trees shall be free of any damage, broken limbs and branches, physical scaring or sun damage to branches and/or the trunk.
11. Pruning (if required) shall be executed by a qualified arborist and to the Australian Standards. Pruning must be a clean cut at the branch collar.
12. For grafted tree varieties any sucker branches growing at base of tree (at graft union) shall be removed at time of planting and rechecked prior to planting works being completed. Sucker removal shall be rechecked during the maintenance and tree establishment period.
13. The northerly aspect (north point) should be clearly indicated on the tree, pot or bag to enable the tree to be planted in exactly the same aspect/orientation at the nursery site.
14. All trees and plants shall have a fibrous, well divided and structured root system. White tipped roots (active roots) shall be visible following removal of pot/bag. Tree roots shall grow outwards and downwards but not become rootbound or girdled.
15. The tree rootball shall be firm and hold existing soil together. It should not crack or fall a part which indicates an underdeveloped root system.
16. Ensure trees are individually labelled with the species name and cultivar.

Preparation works prior to planting:

17. Excavation for the diameter of the rootball must be a minimum of 100mm. Cultivate / rip sides and base of tree pit
18. Trimming, cutting or teasing out of roots is preferred. Roots shall be cut (with a sharp knife or blade) no greater than 50mm (on the sides and bottom) from the surface of the existing rootball.

Tree Planting:

19. If tree, pot or bag is not marked with a north point refer to orientation of leaves where top surface of leaves is turned to face northern aspect. Failure to do this will contribute to leaf, branch, stem and trunk sunburn.
20. Tree shall be planted straight and vertical.
21. Top of rootball shall finish flush with surrounding soil level. The trunk / stem of the tree shall not be covered with soil. This will prevent collar rot.
22. No roots shall be exposed at the completion of the planting works.
23. High quality imported garden soil mix to be used to backfill tree pits. Proof of purchase may be requested to ensure growing media quality.
24. Compact imported garden soil mix to ensure there are no air pockets or voids surrounding the rootball. For larger trees it is recommended compaction occurs at intervals of 300mm depth.
25. Apply an appropriate quantity and type of fertiliser to stimulate tree and root development.
26. Newly planted trees shall be watered to saturation point 3 to 4 times to ensure imported garden soil mix is well compacted around tree roots limiting air voids around the roots.

Guideline for the location of street trees from various assets and service:

Bus Stop - 5m from determined bus stop
Driveway - 2m from driveways
Pedestrian Crossing - 5m from pedestrian crossings
Stormwater inlet/outlet - 2m from stormwater inlet/outlet pits
Street intersection - 12m from intersection kerb line
Street light pole - 5m from centre of light pole
Telegraph/power poles - 5m from centre of pole
Traffic lights - 12m from pole of traffic lights
Underground service pit - 2m from edge of pit

Guideline for the minimum spacing between street trees:

Small trees - 5 metre intervals
Medium trees - 7 metre intervals
Large trees - 10 meter intervals

EXISTING TREE PROTECTION NOTES:

All existing trees, which are to remain undisturbed, shall be adequately protected for the duration of the contract as specified. As a minimum, the Contractor shall install a "Tree Protection Zone" with parrawebbing fencing around trees and held in place with star pickets and safety caps. Obtain approval from the Superintendent prior to removal of tree protection.

Should a tree or trees be damaged or removed without prior consent in writing, a penalty will be applied in accordance with Council's tree protection policies. All approved tree protection works shall be carried out before excavation, grading and site works commence.

Protect trees from damage by groundwork's. Take necessary precautions, including the following:

Storage: Storage of materials, mixing of materials, vehicle parking, disposal of liquids, machinery repairs and refuelling, site office and sheds, stockpiling of soil, rubble and any debris shall not be carried out within the drip line of existing trees.

Damage: Prevent damage to tree bark. Do not attach stays, guys and the like to trees.

Work under trees: Open up excavations under tree canopies for as short a period as possible. **Care to be undertaken to avoid damage to tree roots.** Use hand methods such that the root systems are preserved in tact and damage is minimized.

Roots: Do not cut tree roots exceeding 50mm in diameter unless permitted in writing by Council's Tree Management Officer. Confirm on site with the Superintendent. Where it is necessary to cut tree roots, use means of cutting that does not unduly disturb the remaining root system. Immediately after cutting, the tree should be watered and treated with a liquid rooting hormone to stimulate production of new roots. Examples include Formula 20 and Hormone 20.

Compacted ground: Do not compact ground under trees. If compaction does occur, notify the Superintendent and obtain instructions.

MAINTENANCE AND TREE ESTABLISHMENT NOTES:

The Contractor shall rectify, maintain and care for all components within the extent of works for the duration of the construction period until practical completion is given in writing by Council Officers.

At practical completion, Council Officers shall inspect the site for defects. Defects identified at practical completion shall be rectified by the Contractor at the Contractor's expense prior to completion of the construction period.

The Maintenance and Tree Establishment Period commences upon Council's written satisfaction of the following:

- Completion of works as per the contract;
- Rectification of all defects identified at practical completion;

The Maintenance and Tree Establishment Period shall include, but not be limited to:

- Watering;
- Pest and disease control;
- Fertilising;
- Pruning;
- Rectification of failed tree pit surrounds;
- Rectification of defects identified by Council throughout the Maintenance and Tree Establishment Period;
- Provision of labour, material and equipment;
- Replacement of failed or stolen trees.

ATTENDANCE
It is expected that the Contractor attend site weekly for the full length of the maintenance period. It is recommended the Maintenance and Tree Establishment Period be implemented for a minimum period of 8 weeks following Practical Completion (PC).

MAINTENANCE AND TREE ESTABLISHMENT PERIOD LOG BOOK
The Contractor shall maintain a log book to record all inspections and procedures undertaken for the duration of the maintenance and tree establishment period. The log book shall be available at each Inspection of Works for Council Officers to review. The log book shall be submitted to Council at Handover.

GENERAL MAINTENANCE GUIDELINES
Each tree rootball shall receive a minimum three complete waterings to field capacity at fortnightly intervals soaked for the first 8 weeks of Maintenance and Tree Establishment Period, and one complete watering to field capacity at weekly intervals for the remainder of the Maintenance and Tree Establishment Period irrespective of natural rainfall and season. Allow the surface of the soil to partially dry out between waterings.

Ensure the general appearance and quality of plant material is continued for the full length of the construction period and the Maintenance and Tree Establishment Period.

- Watering: Planted trees shall be continuously watered during the remainder of the construction period.
- Pruning: Trees are pruned to eliminate diseased or damaged growth, avoid inter-branch contact and thin out crown in a natural manner. Major tree pruning or lopping should be carried out by a suitably qualified arborist. Generally, ensure that all dead tree branches are removed as soon as noticed.

The Contractor shall be responsible for the control of any pest or disease which may affect the plants. Once the problem has been correctly identified, then a suitable form of treatment should be engaged until the problem has been eliminated. If the use of a chemical spray is required, strict adherence to the manufacturer's recommended rates and handling is essential. Proper care should be taken to protect both the user and the persons likely to be affected or come in contact with the spray. Allowance should be made to carry out such work outside of normal working hours if necessary.

Remove all weed growth and re-occurring weed growth by hand. Also remove any sucker growth (if required) occurring at the base of the tree.

All works during the Maintenance and Tree Establishment Period include the provision of labour, materials and equipment required to complete works at the Contractors expense.

The Contractor is to undertake all rectification works identified by Council at practical completion and throughout the Maintenance and Tree Establishment Period in accordance with this Specification.

INSPECTION BY COUNCIL
The Contractor shall contact Council every 3 weeks for the duration of the maintenance period to organise and attend an on site meeting in order to review the quality of maintenance works. At each meeting, the log book shall be submitted for review.

RECTIFICATION OF DEFECTS
Issues or defects identified by the Superintendent shall be rectified prior to the next scheduled meeting and recorded in the log book.

Two weeks before handover, Council Officers shall inspect the site for defects. Defects identified at this time shall be rectified by the Contractor and at the Contractor's expense prior to Final Handover.

HANDOVER TO COUNCIL
The maintenance of the site shall remain the responsibility of the Contractor until written confirmation of handover is provided by Council. The Contractor shall continue maintenance works as per this specification until written confirmation is given.

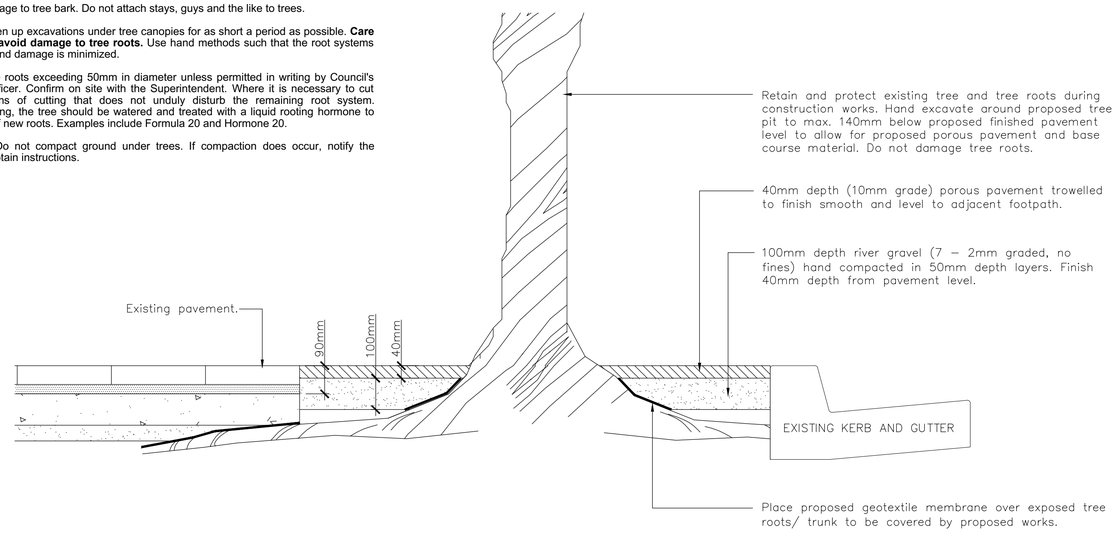

Detail 4: Typical section of existing street tree

SCALE 1:10

All measurement shown are in millimeters

CBD STREET TREES
REVISION DATE: OCTOBER 2013

STANDARD DETAIL: DS39 (Sheet 1)

KERB RAMP DETAILS

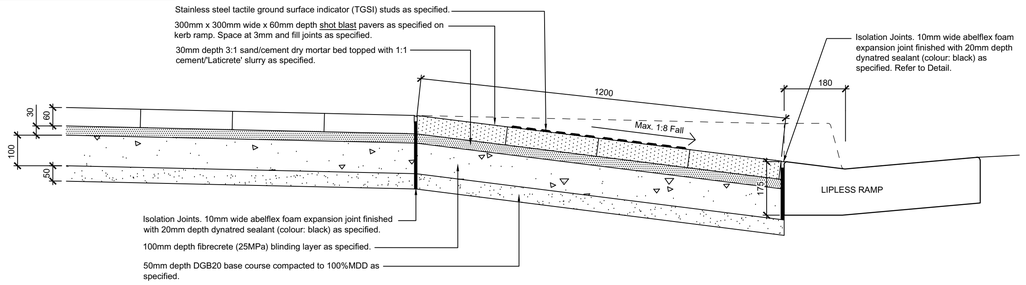

Detail 1: Typical kerb ramp section A-A (Type 1)

SCALE 1:10

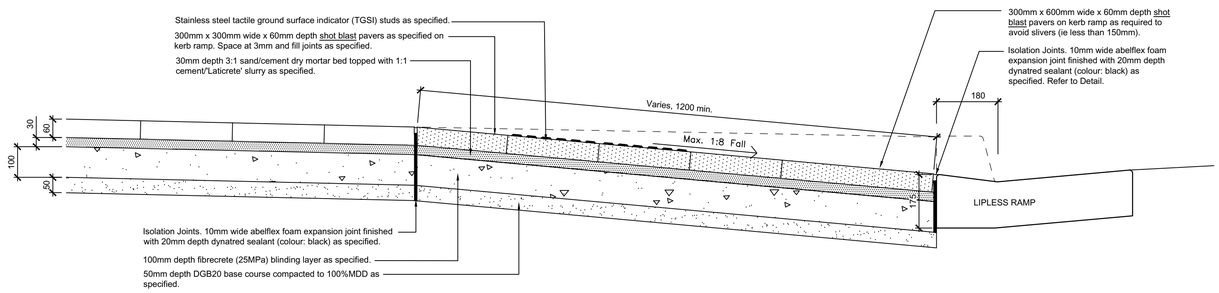

Detail 2: Typical kerb ramp section B-B (Type 2)

SCALE 1:10

TYPICAL PAVEMENT DETAIL

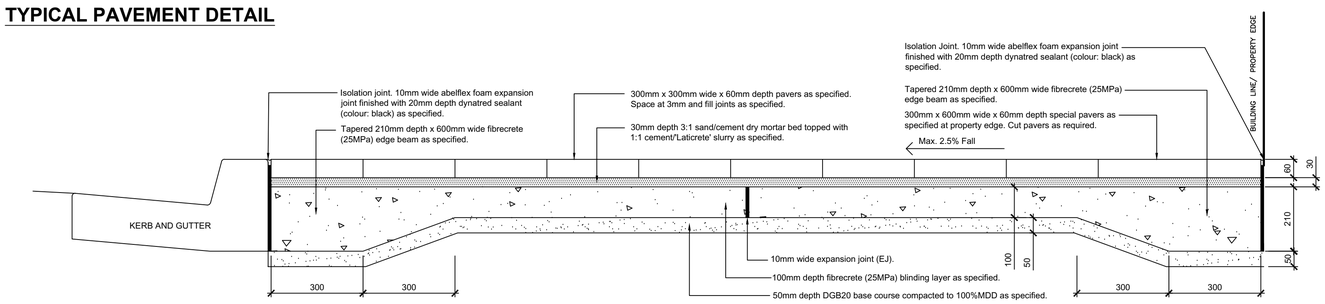

Detail 3: Typical pavement cross section

SCALE 1:10

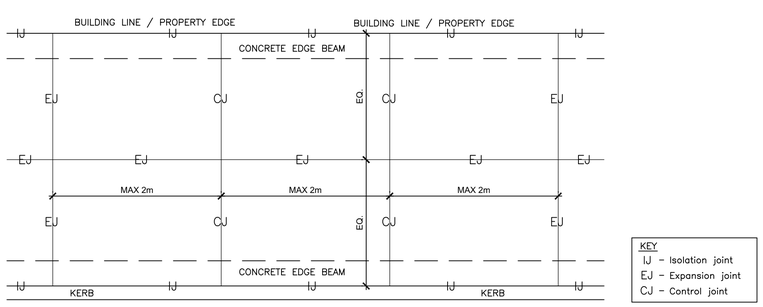

Detail 4: Typical jointing plan

SCALE N.T.S

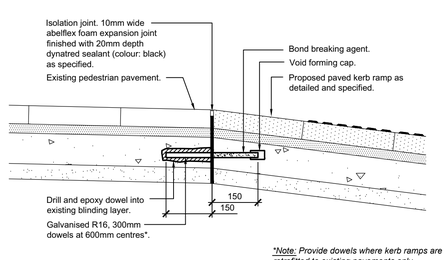

Detail 5: Dowel

SCALE 1:10

PEDESTRIAN PAVEMENT AND KERB RAMPS SPECIFICATION NOTES

This CBD pavement and kerb ramp standard detail shall be read in conjunction with City of Parramatta Council's 'Pubic Domain Guidelines' (PDG) and other relevant City of Parramatta Council's Standard Details (CoP DS). Please refer to the following:

- PDG Chapter 4 - Place Strategies;
- PDG Chapter 6 - Design Details;
- CoP DS1 - Kerbs and Laybacks.

SITE PRELIMINARIES

The designer / contractor shall submit to City of Parramatta Council and relevant authorities Site Preliminary Plans for approval prior to commencing construction works. Approved plans will include, but not be limited to; a detailed works program; a dilapidation report; location of site compound; location of stockpiles and storage areas; sources of power; facilities and waste services; WHS requirements; plant equipment and methods for ground works; location of temporary fences; location of required signage; access on, to and around the site; the use of the site for temporary works; and environmental protection requirements including sedimentation and erosion control. Site Preliminaries Plans work shall be implemented for the duration of construction works. Any changes or variations to the approved Site Preliminaries Plans shall be submitted to the Council or the relevant authorities for approval.

The contractor shall undertake a 'Dial Before You Dig' investigation one month prior to commencing construction works. All services must be located prior to excavation works. The contractor shall liaise with all relevant service authorities as required. All site preliminaries work shall comply to the relevant Australian Standards and EPA requirements.

PEDESTRIAN AND TRAFFIC MANAGEMENT

The designer / contractor shall submit to City of Parramatta Council and relevant authorities (including the RMS) Pedestrian and Traffic Management Plans for approval prior to commencing construction works. Approved plans will include, but not be limited to; the design of temporary roadways and detours; traffic switching operations; intended stages of work; location and adjustments of temporary fencing; maintenance of access to shops; the provision of traffic controllers, signposting, road markings, raised pavement markers, lights and barriers; and any other items required for the safe movement of traffic and the protection of persons and property in accordance with Australian and RMS standards. Pedestrian and Traffic Management Plans shall be implemented for the duration of construction works. Any changes or variations to the approved Traffic and Pedestrian Management Plans shall be submitted to the Council or the relevant authorities for approval.

GENERAL DEMOLITION

Demolish, excavate and remove from site all items scheduled or required for removal for proposed works. All demolition material must be disposed of at an EPA approved tipping site. Proof of documents must be available to be shown upon request. Retain and protect all items proposed to be retained. Damage to private property or assets shall be rectified at the contractors expense. All demolition works shall comply to the relevant Australian Standards.

CONSTRUCTION HOLD POINTS FOR APPROVAL

Give sufficient notice (24 hours) to Council and relevant authorities so that inspection may be made of the following:

- setout of all hardworks;
- excavation levels before covering;
- base course preparation;
- completed formwork;
- reinforcement, cores, dowels, joints and embedments fixed in place;
- commencement of concrete placing;
- completion of concrete works to accurate levels;
- confirmation of paver type;
- unit pavement layout;
- completed joints and finishes;
- setout of all tactile and directional indicators;
- completion of tactile and directional indicators installation;
- evaluation of the finish.

UNIT PAVERS

Manufacturer - Pebblecrete Insitu Pty Ltd. The contractor shall co-ordinate with the nominated firm for access, delivery and time frames.

Manufacturer contact: Pebblecrete insitu Pty Ltd (Contact: Dominic Piperita Ph: 9604 3100)

Typical paver - colour 'alluvium' PPX544:35D
- 300x300x60mm
- finish (honed)
- "V" Class (AS/NZS 4586:2004) slip resistance to top surface of paver
- 1mm paver chamfer along paver edges

Alternative paver size - colour 'alluvium' PPX544:35D
- 600x300x60mm
- finish (honed)
- "V" Class (AS/NZS 4586:2004) slip resistance to top surface of paver
- 1mm paver chamfer along paver edges

Kerb ramp paver - colour 'alluvium' PPX544:35D
- 300x300x60mm and 600x300x60mm
- finish (shot blast)
- "V" Class (AS/NZS 4586:2004) slip resistance to top surface of paver
- 1mm paver chamfer along paver edges

CONCRETE BLINDING LAYER

Fibrecrete blinding layer and base course:

Place 100mm thick fibrecrete (25MPa) blinding layer with equivalent strength to SL72 (includes tapered edge beam: 210mm depth x 600mm wide) on minimum 50mm deep DGB20 to 100% standard dry compaction. Any soft spots in sub-grade to be removed as directed by CoP Superintendent / Asset inspector.

Isolation Joints (IJ):

Place 10mm wide full depth Abelflex foam expansion joint between:
1. Fibrecrete blinding layer and concrete kerb/ kerb ramp;
2. Fibrecrete blinding layer and building line.

Abelflex foam expansion joint to be set 20mm below finished paver level to accommodate 20mm deep Dynatred sealant (colour: black). Refer to Details 1 to 4 of this standard detail.

Expansion Joints (EJ) in fibrecrete blinding layer:

Place 10mm wide full depth Abelflex foam expansion joint perpendicular to kerb and building line at every 6.0m intervals in fibrecrete blinding layer. Refer to this standard detail. Place 10mm wide full depth Abelflex foam expansion joint centrally in fibrecrete blinding layer. Refer to Detail 4 of this standard detail.

Control Joints (CJ) in fibrecrete blinding layer:

Place 3mm wide x 25mm deep sawcut control joint perpendicular to kerb and building line in fibrecrete blinding layer at every 2.0m intervals. Refer to Detail 4 of this standard detail.

SETOUT OF PAVERS

Pavers shall be setout accurately as per approved site construction plans and this standard detail. Any variation shall be referred to CoP Development Officer / Superintendent / Asset Inspector for approval prior to construction.

LAYING OF PAVERS

Laying pavers (including mortar bed, cuts and finishes):

Laying of pavers is to commence from back of kerb towards property boundary. Ensure all pavers are fully bedded on a 30mm thick 3:1 sand/cement dry bed topped with cement slurry to achieve bond with pavers. For cement slurry use 1:1 cement: 'Laticrete 3701 Mortar Admix'. Mix mortar admix to manufacturers specifications. Do not apply water to cement slurry. The pavers are to be manually tampered with a rubber mallet into the slurry bed. The use of vibrating compaction equipment eg. wakka plate, is strictly prohibited. Cut pavers as shown on this standard detail. All paver edges to be laid flush to adjacent edges to avoid trip hazards. Ensure adjoining existing pavements finish flush with existing / proposed works. Minimum paver width is to be 150mm. Use 600 x 300mm paver where required and as shown to avoid slivers (ie less than 150mm).

Jointing between pavers:

Joints between pavers shall be 3mm. The use of spacers is required. Top of pavers shall finish flush to form an even surface as to avoid trip hazards. The joints between pavers are to be filled with a cement / 'Laticrete' slurry (as specified above). Jointing material shall finish flush with surface edge of pavers.

PROTECTIVE PAVER SEALANT

Paver Sealant Preparation: Pavers are to be cleaned with all stains, contaminants, salt residue and debris removed in preparation for sealant application. Clean pavement surface with appropriate 'Technisealʼ cleaning products or an approved equivalent. Prepare the entire surface by removing all efflorescence and ground-in dirt. This ensures a uniform cleaning and allows the protective sealant to better penetrate the surface. Apply sealant as per manufacturers recommendations. Wash down with water and soap if required.

Paver Sealant Type: Apply 'Technisealʼ WL1 Wetlook Protective Sealant to surface of paver as per manufacturers recommendations.

KERB RAMPS

Refer to Council's PDG for kerb ramp types, setouts and orientations. Refer to this standard drawing for dimension, gradients, and finishes.

DOWELS

Where kerb ramps are retrofitted to existing pavements, provide R16, 300mm long galvanised dowels. Drill and epoxy dowel into pavement blinding layer. Coat other half of dowel in bond breaking agent and install with void forming cap. Place dowels at 600mm centres.

TGSIs (tactile ground surface indicators):

TGSI indicator studs:

Tactile indicator type - 316 stainless steel tactile stud indicator. Tactile surface indicators shall be manufactured to, setout and installed in accordance with Council's PDG and AS1428: Design for Access and Mobility. Tactile indicators shall have a minimum slip resistance of R12.

TGSI directional indicators:

Directional indicator type - 316 stainless steel directional indicator. Directional surface indicators shall be manufactured to, setout and installed in accordance with Council's PDG and AS1428: design for access and mobility. Directional indicators shall have a minimum slip resistance of R12.

SERVICE LID TREATMENT

Replace all service pit lids and frames with cast iron covers and frames to relevant service authority standards. Application of new service lids are to be pre approved by the appropriate authority. Adjust height/ alignment of pit frame/ lid as required to suit new work and alignment of pavers. Adjoining surface edges shall finish flush. Provide 10mm wide dynatred seal (colour: black) around perimeter of service pit lid/frame. Concrete collars shall not be visible. The designer / contractor shall liaise with the relevant service authority for proposed works. Refer to this standard detail.

Note: Telstra pits to be adjusted by Telstra staff or approved Telstra contractors only.

CLEANING OF PAVERS

All pavers laid during the course of one working day must be cleaned at the end of that day before proceeding with laying of subsequent pavers. This is to prevent residue build up on pavers which may become difficult to clean if left overnight or for prolonged periods.

All measurement shown are in millimeters

CBD PAVING, DRIVEWAY AND KERB RAMP DETAILS

REVISION DATE: OCTOBER 2017

STANDARD DETAIL: DS40 (Sheet 1)

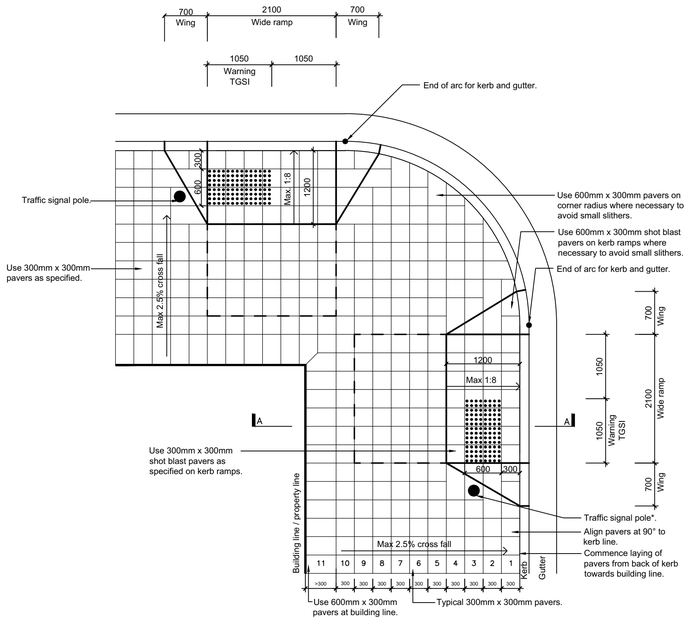

Detailed plan 1a: Typical 3000 corner radius with 2100 wide ramp (refer to PDG)

SCALE 1:50

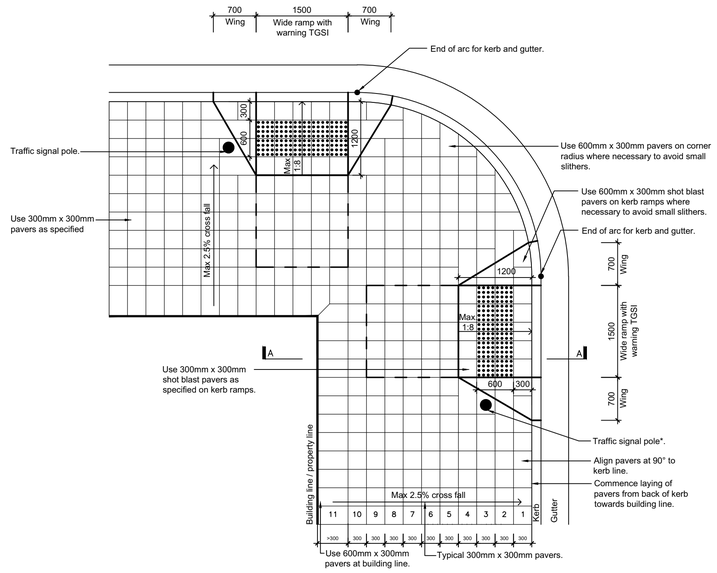

Detailed plan 1b: Typical 3000 corner radius with 1500 wide ramp (refer to PDG)

SCALE 1:50

$\tan \alpha = \frac{a}{b} = \frac{a}{b}$

$\therefore a = \tan \alpha \times b$

$\tan 30° = 0.577$

(hence approximate dimension)

b = 1.2 ⇒ a = 0.7
b = 1.5 ⇒ a = 0.85
b = 1.8 ⇒ a = 1.05
b = 2.1 ⇒ a = 1.2
b = 2.4 ⇒ a = 1.4

Note: Disregard arch length, use chord length.

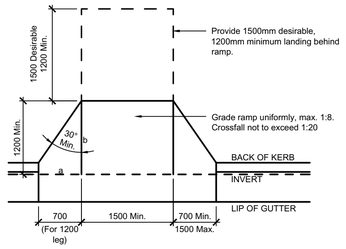

Detailed plan 3: Kerb ramp layout

SCALE 1:50

NOTE: Typical kerb ramp widths of 2.1m (preferred width) and 1.5m (minimum width) with 700mm wing widths shown only. Refer to Detailed plan 3 for additional wing width information.

At signalised crossings, kerb ramps are to be the width of the marked pedestrian crossing and shall comply to RMS Standards.

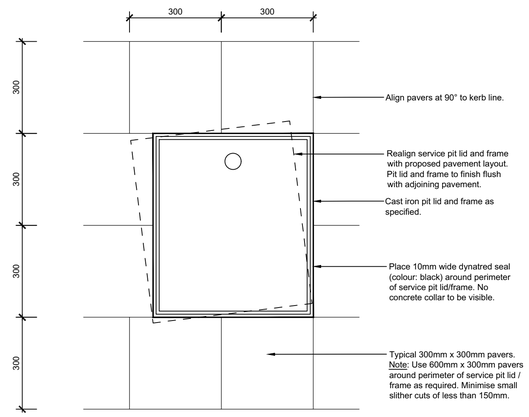

Detailed plan 4: Typical services pit lid realignment detail

SCALE 1:10

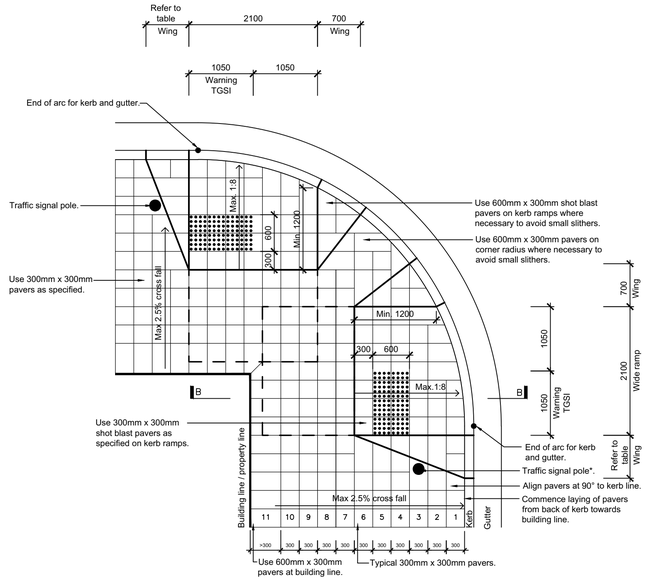

* *Traffic signal poles to comply with RMS traffic signal design plans.*

Detailed plan 2a: Typical 4500 corner radius with 2100 wide ramp (refer to PDG)

SCALE 1:50

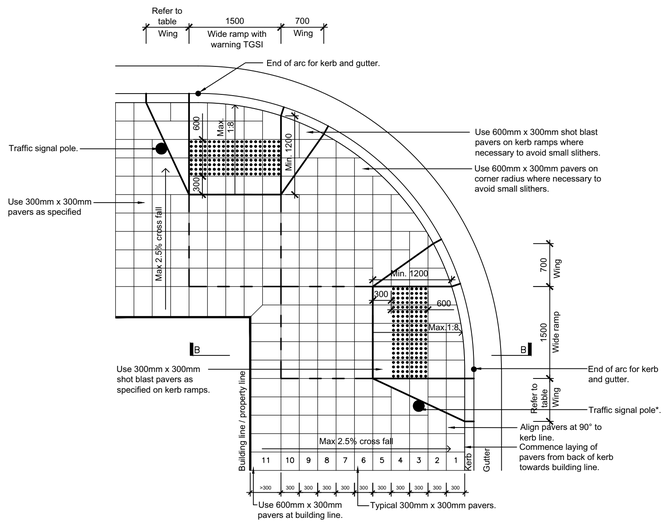

Detailed plan 2b: Typical 4500 corner radius with 1500 wide ramp (refer to PDG)

SCALE 1:50

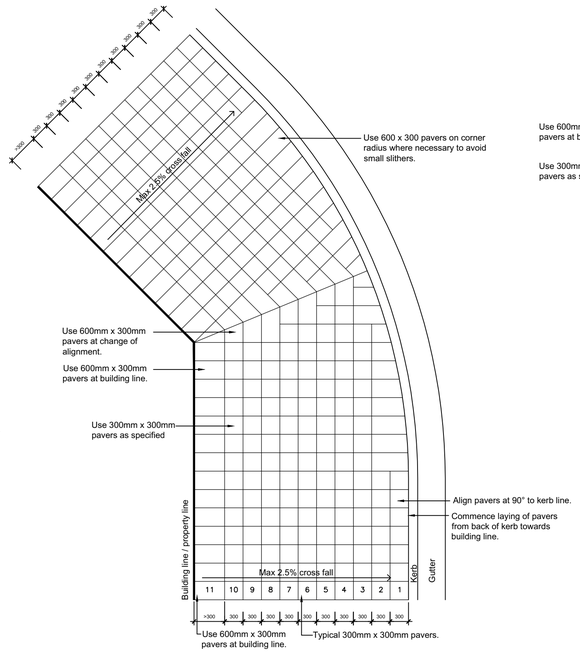

Detailed plan 5: Typical paver layout B (refer to PDG)

SCALE 1:50

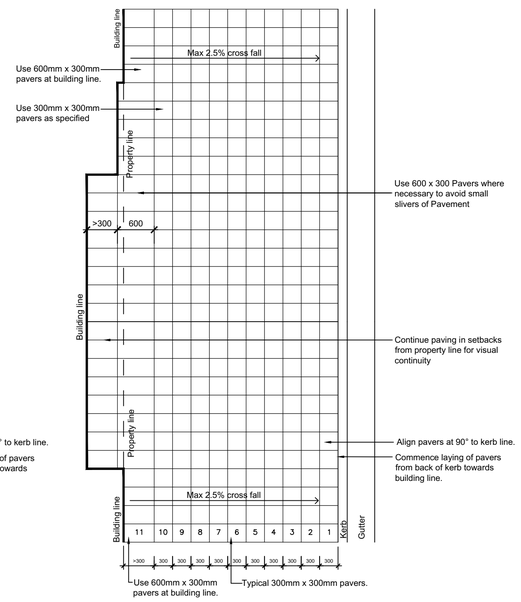

Detailed plan 6: Typical paver layout C (refer to PDG)

SCALE 1:50

All measurement shown are in millimeters

CBD PAVING, DRIVEWAY AND KERB RAMP DETAILS

REVISION DATE: OCTOBER 2017

STANDARD DETAIL: DS40 (Sheet 2)

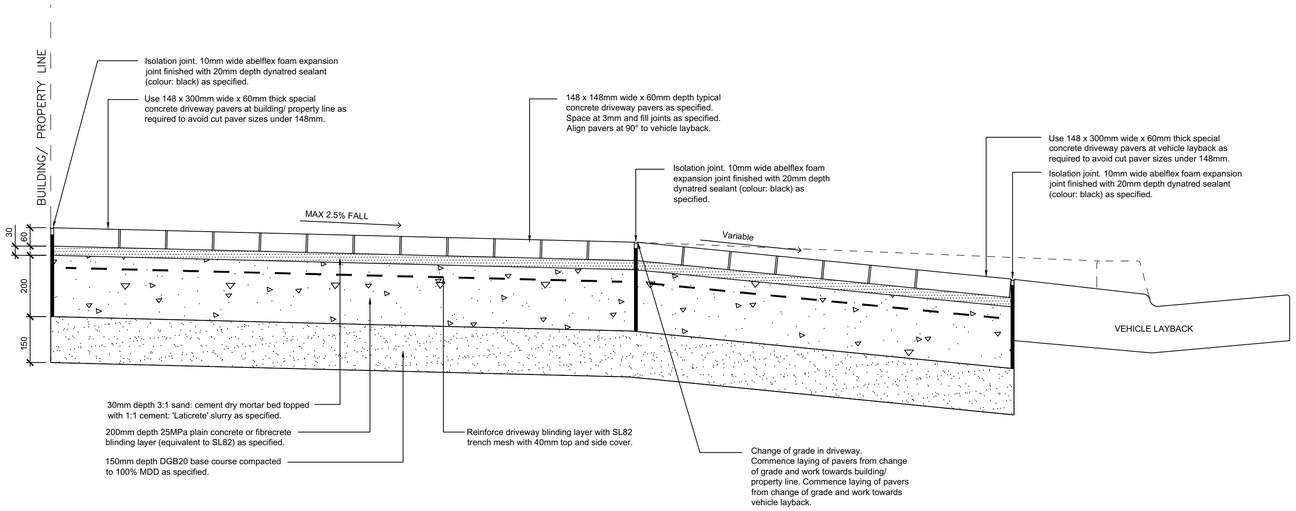

Detail 6: Typical vehicular crossing section

SCALE 1:10

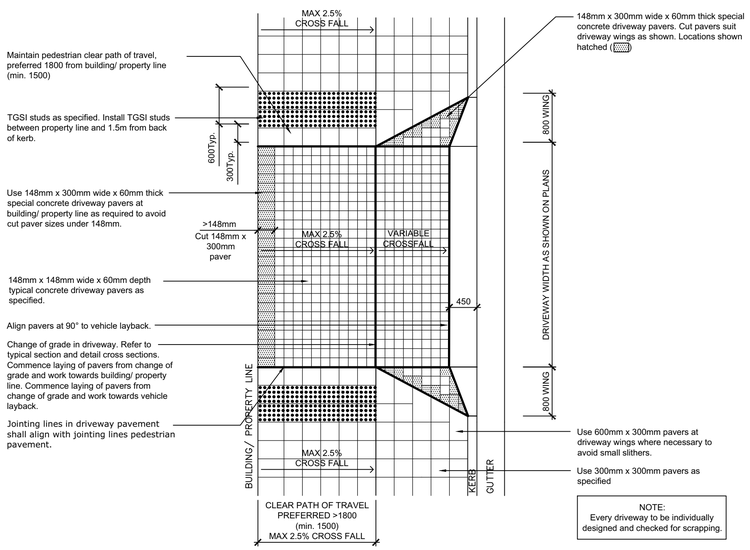

Detail 7: Typical vehicular crossing plan

SCALE 1:50

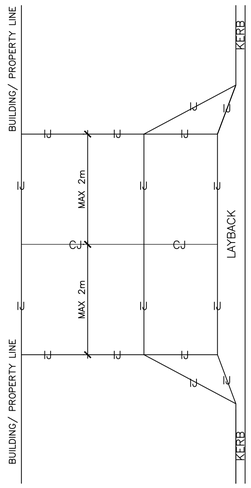

KEY
IJ - Isolation joint
CJ - Control joint

Detail 8: Typical jointing detail for concrete blind layer

SCALE 1:50

DRIVEWAY SPECIFICATION NOTES

This CBD standard vehicle crossing detail shall be read in conjunction with City of Parramatta Council's 'Pubic Domain Guidelines' (PDG) and other relevant City of Parramatta Council's Standard Details (CoP DS). Please refer to the following:

- PDG Chapter 4 - Place Strategies;
- PDG Chapter 6 - Design Details;
- CoP DS1 - Kerbs and Laybacks.

SITE PRELIMINARIES

The designer / contractor shall submit to City of Parramatta Council and relevant authorities Site Preliminary Plans for approval prior to commencing construction works. Approved plans will include, but not be limited to; a detailed works program; a dilapidation report; location of site compound; location of stockpiles and storage areas; sources of power; facilities and waste services; WHS requirements; plant equipment and methods for ground works; location of temporary fences; location of required signage; access on, to and around the site; the use of the site for temporary works; and environmental protection requirements including sedimentation and erosion control. Site Preliminaries Plans work shall be implemented for the duration of construction works. Any changes or variations to the approved Site Preliminaries Plans shall be submitted to the Council or the relevant authorities for approval.

The contractor shall undertake a 'Dial Before You Dig' investigation one month prior to commencing construction works. All services must be located prior to excavation works. The contractor shall liaise with all relevant service authorities as required. All site preliminaries work shall comply to the relevant Australian Standards and EPA requirements.

PEDESTRIAN AND TRAFFIC MANAGEMENT

The designer / contractor shall submit to City of Parramatta Council and relevant authorities (including the RMS) Pedestrian and Traffic Management Plans for approval prior to commencing construction works. Approved plans will include, but not be limited to; the design of temporary roadways and detours; traffic switching operations; intended stages of work; location and adjustments of temporary fencing; maintenance of access to shops; the provision of traffic controllers, signposting, road markings, raised pavement markers, lights and barriers; and any other items required for the safe movement of traffic and the protection of persons and property in accordance with Australian and RMS standards. Pedestrian and Traffic Management Plans shall be implemented for the duration of construction works. Any changes or variations to the approved Traffic and Pedestrian Management Plans shall be submitted to the Council or the relevant authorities for approval.

GENERAL DEMOLITION

Demolish, excavate and remove from site all items scheduled or required for removal for proposed works. All demolition material must be disposed of at an EPA approved tipping site. Proof of documents must be available to be shown upon request. Retain and protect all items proposed to be retained. Damage to private property or assets shall be rectified at the contractors expense. All demolition works shall comply to the relevant Australian Standards.

CONSTRUCTION HOLD POINTS FOR APPROVAL

Give sufficient notice (24 hours) to Council and relevant authorities so that inspection may be made of the following:

- setout of all hardworks;
- excavation levels before covering;
- base course preparation;
- completed formwork;
- reinforcement, cores, dowels, joints and embedments fixed in place;
- commencement of concrete placing;
- completion of concrete works to accurate levels;
- confirmation of paver type;
- unit pavement layout;
- completed joints and finishes;
- setout of all tactile and directional indicators;
- completion of tactile and directional indicators installation;
- evaluation of the finish.

UNIT PAVERS

Manufacturer - Pebblecrete Insitu Pty Ltd. The contractor shall co-ordinate with the nominated firm for access, delivery and timeframes.

Manufacturer contact: Pebblecrete insitu Pty Ltd (Contact: Dominic Piperita Ph: 9604 3100)

Typical paver - colour 'alluvium' PPX544:35D
- 148mm x 148mm x 60mm
- finish (honed)
- "V" Class (AS/NZS 4586:2004) slip resistance to top surface of paver
- 1mm paver chamfer along paver edges

Alternate paver size - colour 'alluvium' PPX544:35D
- 148mm x 300mm x 60mm
- finish (honed)
- "V" Class (AS/NZS 4586:2004) slip resistance to top surface of paver
- 1mm paver chamfer along paver edges

CONCRETE BLINDING LAYER

Concrete blinding layer and base course:

Place 200mm thick 25MPa plain concrete or fibrecrete blinding layer (equivalent strength to SL82) on minimum 150mm deep DGB20 to 100% standard dry compaction. Any soft spots in sub-grade to be removed as directed by CoP Superintendent / Asset inspector. Reinforce concrete blinding layer with SL82 trench mesh with 40mm top and sides cover.

Isolation Joints (IJ):

Place 10mm wide full depth Abelflex foam expansion joint between:
1. Blinding layer and concrete vehicle layback.
2. Blinding layer and building line.
3. 100mm depth fibrecrete blinding layer (pavement) and 200mm depth blinding layer (vehicle crossing).

Abelflex foam expansion joint to be set 20mm below finished paver level to accommodate 20mm deep Dynatred sealant (colour: black). Refer to Detail 6 and 8 of this standard detail.

Control Joints (CJ) in blinding layer:

Place 3mm wide x 25mm deep sawcut control joint perpendicular to kerb and building line in blinding layer at maximum 2.0m intervals. Refer to Detail 8 of this standard detail.

SETOUT OF PAVERS

Pavers shall be setout accurately as per approved site construction plans and this standard detail. Any variation shall be referred to CoP Development Officer / Superintendent / Asset Inspector for approval prior to construction. Jointing lines in driveway pavement shall align with jointing lines pedestrian pavement.

LAYING OF PAVERS

Laying pavers (including mortar bed, cuts and finishes):

Laying of pavers is to commence from the vehicle crossing change of grade. Pavers will be laid towards the property boundary and towards the vehicle layback. Ensure all pavers are fully bedded on a 30mm thick 3:1 sand/cement dry bed topped with cement slurry to achieve bond with pavers. For cement slurry use 1:1 cement: 'Laticrete 3701 Mortar Admix'. Mix mortar admix to manufacturers specifications. Do not apply water to cement slurry. The pavers are to be manually tampered with a rubber mallet into the slurry bed. The use of vibrating compaction equipment eg. wakka plate, is strictly prohibited. Cut pavers as shown on this standard detail. All paver edges to be laid flush to adjacent edges to avoid trip hazards. Ensure adjoining existing pavements finish flush with existing / proposed works. Minimum paver width is to be 148 x 148 x 300mm. Use 148 x 300mm paver where required and as shown to avoid slivers (ie less than 148mm).

Jointing between pavers:

Joints between pavers shall be 3mm. The use of spacers is required. Top of pavers shall finish flush to form an even surface as to avoid trip hazards. The joints between pavers are to be filled with a cement / 'Laticrete' slurry (as specified above). Jointing material shall finish flush with surface edge of pavers.

PROTECTIVE PAVER SEALANT

Paver Sealant Preparation: Pavers are to be cleaned with all stains, contaminants, salt residue and debris removed in preparation for sealant application. Clean pavement surface with appropriate 'Techniseal' cleaning products or an approved equivalent. Prepare the entire surface by removing all efflorescence and ground-in dirt. This ensures a uniform cleaning and allows the protective sealant to better penetrate the surface. Apply sealant as per manufacturers recommendations. Wash down with water and soap if required.

Paver Sealant Type: Apply 'Techniseal' WL1 Wetlook Protective Sealant to surface of paver as per manufacturers recommendations.

TGSIs (tactile ground surface indicators):

TGSI indicator studs:

Tactile indicator type - 316 stainless steel tactile stud indicator. Tactile surface indicators shall be manufactured to, setout and installed in accordance with Council's PDG and AS1428: Design for Access and Mobility. Tactile indicators shall have a minimum slip resistance of R12.

CLEANING OF PAVERS

All pavers laid during the course of one working day must be cleaned at the end of that day before proceeding with laying of subsequent pavers. This is to prevent residue build up on pavers which may become difficult to clean if left overnight or for prolonged periods.

All measurement shown are in millimeters

CBD PAVING, DRIVEWAY AND KERB RAMP DETAILS

REVISION DATE: OCTOBER 2017

STANDARD DETAIL: DS40 (Sheet 3)

SECONDARY TREATMENT AND NEIGHBOURHOOD CENTRE PAVING DESIGN AND SPECIFICATION

NOTE: THE PROJECT SPECIFIC DESIGN/PAVEMENT PLAN ALWAYS TAKES PRECEDENCE OVER DS41 STANDARD PAVEMENT SETOUT. DS41 MUST ALWAYS BE READ IN CONJUNCTION WITH THE APPROVED PROJECT SPECIFIC DESIGN/PAVEMENT PLAN.

PRELIMINARIES:

- PRIOR TO COMMENCING THE PROJECT THE CONTRACTOR IS TO LOCATE ALL SERVICES IN AREAS WHERE EXCAVATION IS TO OCCUR.
- A TRAFFIC CONTROL PLAN IS TO BE PREPARED AND APPROVED BY THE RTA PRIOR TO WORK COMMENCING.
- EXISTING FOOTPATH PAVEMENT MATERIAL (WHETHER PAVERS, ASPHALT OR CONCRETE) IS TO BE EXCAVATED, MATERIAL MUST BE REMOVED FROM SITE.
- ANY KERB AND GUTTER TO BE REPLACED IS TO BE REMOVED FROM SITE AND ROAD PAVEMENT RESTORED IN ACCORDANCE WITH PCC STANDARD DETAIL DS1.

PAVER MATERIAL MANUFACTURER:

THE PAVING MATERIAL TO BE USED IS A PRECAST CONCRETE PAVER AS FABRICATED BY PEBBLECRETE INSITU PTY LTD (CONTACT: FRANK PIPERITA 9604 3100)

GENERAL PAVER DESCRIPTION:

BORDER PAVER – COLOUR 'SANDSTONE' PPX540:120D
– 300x300x60mm (TYPICAL PAVER SIZE)
– FINISH (HONED)
BORDER PAVER – COLOUR 'SANDSTONE' PPX540:120D
– 600x300x60mm (SPECIAL PAVER SIZE)
– FINISH (HONED)
KERB RAMP PAVER – COLOUR 'SANDSTONE' PPX540:120SB
– 300x300x60mm (TYPICAL PAVER SIZE)
– FINISH (SHOTBLAST)
KERB RAMP PAVER – COLOUR 'SANDSTONE' PPX540:120SB
– 600x300x60mm (SPECIAL PAVER SIZE)
– FINISH (SHOTBLAST)
TACTILE – COLOUR 'SANDSTONE' PPX540(TAC):120D
– 300x300x60mm (TYPICAL PAVER SIZE)
– FINISH (TACTILE)
TACTILE – COLOUR 'SANDSTONE' PPX540(TAC):120D
– 600x300x60mm (SPECIAL PAVER SIZE)
– FINISH (TACTILE)

EPPING PAVER DESCRIPTION:

BORDER PAVER – COLOUR 'TERRACOTTA' PPX670:120D
– 300x300x60mm (TYPICAL PAVER SIZE)
– FINISH (HONED)
BORDER PAVER – COLOUR 'TERRACOTTA' PPX670:120D
– 600x300x60mm (SPECIAL PAVER SIZE)
– FINISH (HONED)
KERB RAMP PAVER – COLOUR 'TERRACOTTA' PPX670:120SB
– 300x300x60mm (TYPICAL PAVER SIZE)
– FINISH (SHOTBLAST)
KERB RAMP PAVER – COLOUR 'TERRACOTTA' PPX670:120SB
– 600x300x60mm (SPECIAL PAVER SIZE)
– FINISH (SHOTBLAST)
TACTILE – COLOUR 'TERRACOTTA' PPX670(TAC):120D
– 300x300x60mm (TYPICAL PAVER SIZE)
– FINISH (TACTILE)
TACTILE – COLOUR 'TERRACOTTA' PPX670(TAC):120D
– 600x300x60mm (SPECIAL PAVER SIZE)
– FINISH (TACTILE)

HARRIS PARK PAVER DESCRIPTION:

BORDER PAVER 'TYPE 1' – COLOUR 'GREEN' PPX760:60'GREEN'
– 300x300x60mm (TYPICAL PAVER SIZE)
– FINISH (HONED)
BORDER PAVER 'TYPE 1' – COLOUR 'GREEN' PPX760:60'GREEN'
– 600x300x60mm (SPECIAL PAVER SIZE)
– FINISH (HONED)
BORDER PAVER 'TYPE 2' – COLOUR 'BLACK' PPX721:60'BLACK'
– 600x300x60mm (TYPICAL PAVER SIZE)
– FINISH (HONED)
ARTWORK PAVER – PPX825:60'ARTWORK (S–CURVE)'
– 600x300x60mm (TYPICAL PAVER SIZE)
– FINISH (HONED)
KERB RAMP PAVER – COLOUR 'GREEN' PPX760:60'GREEN'
– 300x300x60mm (TYPICAL PAVER SIZE)
– FINISH (SHOTBLAST)
KERB RAMP PAVER – COLOUR 'GREEN' PPX760:60'GREEN'
– 600x300x60mm (SPECIAL PAVER SIZE)
– FINISH (SHOTBLAST)
TACTILE – COLOUR 'BLACK' PPX721:45(TAC)'BLACK'
– 300x300x60mm (TYPICAL PAVER SIZE)
– FINISH (TACTILE)
TACTILE – COLOUR 'BLACK' PPX721:45(TAC)'BLACK'
– 600x300x60mm (SPECIAL PAVER SIZE)
– FINISH (TACTILE)
HERITAGE PAVER – 'MOUNT WHITE–WHITE' SANDSTONE PAVER
– 600x150X50mm

FIBRECRETE BLINDING LAYER:

PLACE 100mm THICK FIBRECRETE (25MPa) BLINDING LAYER WITH EQUIVALENT STRENGTH TO SL72 (INCLUDES TAPERED 600mm WIDE X 210mm DEEP EDGE BEAM UNDER BORDER PAVERS).
PLACE FIBRECRETE BLINDING LAYER ON MINIMUM 50mm DEEP DGB20 TO 100% STANDARD DRY COMPACTION IN ACCORDANCE WITH AS1289.5.1.1. REFER TO DETAIL 7.
ANY SOFT SPOTS IN SUB–GRADE TO BE REMOVED AS DIRECTED BY COUNCIL'S PROJECT MANAGER.

ISOLATION JOINTS:
PLACE 10mm WIDE FULL DEPTH ABELFLEX FOAM EXPANSION JOINT BETWEEN FIBRECRETE BLINDING LAYER AND CONCRETE KERB AND FIBRECRETE BLINDING LAYER AND BUILDING LINE.
ABELFLEX FOAM EXPANSION JOINT TO EXTEND TO 20mm BELOW FINISHED PAVER LEVEL TO ACCOMODATE 20mm DEEP DYNATRED SEALANT (SEE JOINTING BELOW). REFER TO DETAIL 7 AND 10.

EXPANSION JOINTS:
PLACE 10MM WIDE FULL DEPTH ABELFLEX FOAM EXPANSION JOINT PERPENDICULAR TO KERB AND BUILDING LINE AT EVERY 6.0m INTERVALS. REFER TO DETAIL 10.
WHERE WIDTH OF PAVEMENT (BETWEEN KERB AND BUILDING LINE) IS GREATER THAN 2.8m, PLACE 10mm WIDE FULL DEPTH ABELFLEX FOAM EXPANSION JOINT CENTRALLY IN FIBRECRETE BLINDING LAYER. REFER TO DETAIL 10.

CONTROL JOINTS:
PLACE 3–5mm WIDE x 25mm DEEP SAWCUT CONTROL JOINT PERPENDICULAR TO KERB AND BUILDING LINE AT EVERY 2.0m INTERVALS. REFER TO DETAIL 10.

SETOUT - PAVERS:

AS A GENERAL GUIDE ONLY, PAVERS SHALL BE SETOUT AS PER DIMENSIONS AND LOCATIONS AS SHOWN ON THIS SHEET (DS41 SHEET 1 & 2).

LAYING - PAVERS:

LAYING OF PAVERS IS TO COMMENCE FROM BACK OF KERB TOWARDS PROPERTY BOUNDARY. REFER TO DETAIL 6. ENSURE ALL PAVERS ARE FULLY BEDDED ON A 30mm THICK 3:1 SAND/CEMENT DRY MORTAR BED TOPPED WITH A 1:1 CEMENT/WATER SLURRY TO ACHIEVE BOND WITH PAVERS. SUPPORT ALL PAVERS ADJOINING ASPHALT INFILL WITH MORTAR HAUNCH. REFER TO DETAIL 7.
THE PAVERS ARE TO BE MANUALLY TAMPERED WITH A RUBBER MALLET INTO THE WET MORTAR. THE USE OF VIBRATING COMPACTION EQUIPMENT eg. WAKA PLATE, IS STRICTLY PROHIBITED.
WHERE PAVERS ARE TO BE LAID IN A RADIAL OR CURVE ALIGNMENT, PAVERS TO BE CUT RADIAL TO CENTRE. REFER TO DETAIL 5. ALL PAVERS TO BE LAID LEVEL TO THOSE ADJACENT TO AVOID TRIP HAZARDS.
MINIMUM PAVER WIDTH IS TO BE 100mm. USE 600 x 300mm PAVER WHERE REQUIRED TO AVOID SLIVERS (ie LESS THAN 100mm) OR TO MINIMISE GAP ON CURVES. REFER TO DETAIL 5 AND 6.

ASPHALT INFILL:

PLACE ASPHALT IN 3 LAYERS OF AC10–LIGHT. COMPACT ASPHALT IN LAYERS WITH VIBRATING COMPACTION EQUIPMENT eg. WAKA PLATE OR APPROVED EQUIVALENT (DO NOT COMPACT OVER PAVERS). TEMPERATURE OF ASPHALT WHEN LAYING TO BE 165–180°C. REFER TO DETAIL 7.
APPLY 2 COATS OF 'BORAL SURFACE COAT' (COLOUR: BLACK) TO TOP OF ASPHALT SURFACE. APPLY TO MANUFACTURERS SPECIFICATIONS. PAVERS BORDERING ASPHALT INFILL SHOULD BE BORDERED WITH A PAVEMENT TAPE SUCH AS MASKING TAPE TO ENSURE A NEAT, CLEAN EDGE BETWEEN PAVERS AND ASPHALT/SURFACE COAT FINISH.
NOTE: A COPY OF 'BORAL SURFACE COAT' SPECIFICATION AND APPLICATION NOTES WILL BE SUPPLIED TO THE CONTRACTOR BY COUNCIL'S PROJECT MANAGER.

JOINTING:

BETWEEN INDIVIDUAL PAVERS – PAVERS ARE TO BUTT JOIN FLUSH TOGETHER TO FORM AN EVEN SURFACE AS TO AVOID TRIP HAZARDS. THE JOINTS BETWEEN PAVERS ARE TO BE FILLED WITH ULTRA FINE SILICA SAND AS SUPPLIED BY BENEDICTS SAND AND SOIL (ph.9986 3500) OR AN APPROVED EQUIVALENT.
BETWEEN PAVERS AND CONCRETE KERB AND BUILDING LINE – FILL 20mm GAP WITH SEAL. SEALANT MATERIAL TO BE 'DYNATRED' (COLOUR: BLACK) AS SUPPLIED BY HB FULLER AUSTRALIA (ph. 1800 423 855) OR AN APPROVED EQUIVALENT. REFER TO DETAIL 7.

PRAM RAMP:

GENERALLY PRAM RAMPS ARE TO BE SETOUT AS SHOWN IN DETAILS 1, 2 AND 3. WHERE ANY CHANGES TO ANY OF THE DETAILS ARE REQUIRED, MINIMUM PAVER WIDTH IS TO BE 100mm. USE 600 x 300mm PAVER WHERE REQUIRED TO AVOID SLIVERS (ie LESS THAN 100mm). CONFIRMATION FROM COUNCIL'S PROJECT MANAGER IS REQUIRED PRIOR TO CONSTRUCTION.
NOTE: PRAM RAMP PAVERS ON KERB RAMP TO BE 'SHOT BLAST' FINISH

ROOF OUTLETS:

WHERE ROOF OUTLET CONNECTIONS ARE TO BE PROVIDED USE 150mm x 90mm GALVANISED STEEL RECTANGULAR HOLLOW SECTION. WHERE MORTAR COVER CANNOT BE ACHIEVED PAVERS ARE TO BE GLUED TO STEEL SECTION AS REQUIRED WITH HIGH STRENGTH EPOXY ADHESIVE.

SERVICE LID TREATMENT:

REPLACE ALL EXISTING SERVICE LIDS WITH CAST IRON COVERS AND FRAMES (DIAMOND PATTERN OR APPROVED EQUIVALENT).
NEW SERVICE LIDS ARE TO BE PRE APPROVED BY THE APPROPRIATE AUTHORITY.
ADJUST HEIGHT OF PIT FRAME/LID AS REQUIRED TO SUIT NEW WORK.
PROVIDE 10mm WIDE DYNATRED SEAL (COLOUR: BLACK) AROUND PERIMETER OF SERVICE PIT LID/FRAME.

CLEANING OF PAVERS:

ALL PAVERS LAID DURING THE COURSE OF ONE WORKING DAY MUST BE CLEANED AT THE END OF THAT DAY BEFORE PROCEEDING WITH LAYING OF SUBSEQUENT PAVERS. THIS IS TO PREVENT CEMENT, ASPHALT AND SURFACE COATING RESIDUE BUILD UP ON PAVERS WHICH MAY BECOME DIFFICULT TO CLEAN IF LEFT OVERNIGHT OR FOR PROLONGED PERIODS.

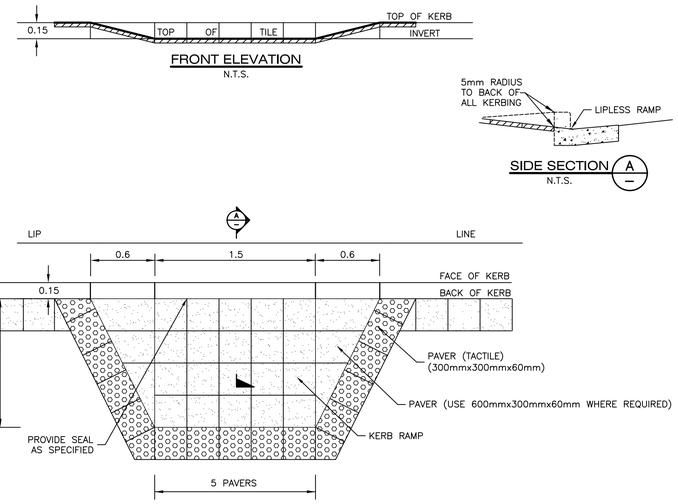

NOTE: PAVERS ON ALL KERB RAMPS OTHER THAN TACTILE PAVERS TO HAVE A SHOT BLAST FINISH

NOTES
ALL KERB RAMPS ARE TO BE ALIGNED WITH THE DESIRED DIRECTION OF PEDESTRIAN TRAVEL.
REFER TO "DESIRABLE KERB RAMP LAYOUTS" ON PCC STANDARD DRAWING DS4

DETAIL 1 - TYPICAL KERB RAMP 1.5m WIDE

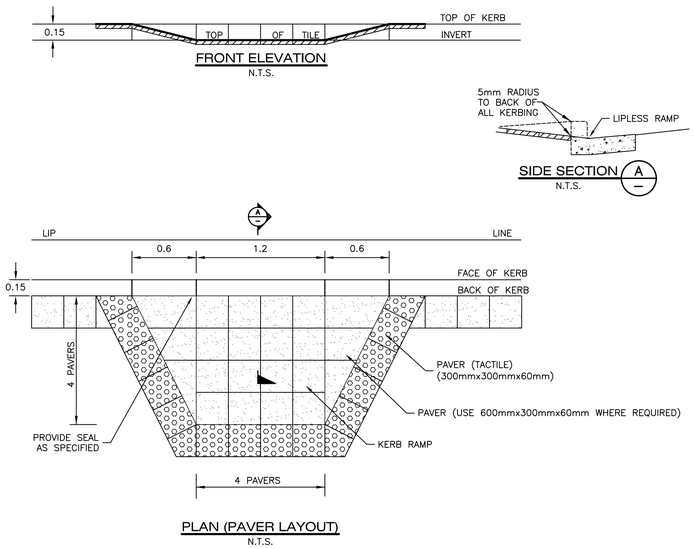

NOTE: PAVERS ON ALL KERB RAMPS OTHER THAN TACTILE PAVERS TO HAVE A SHOT BLAST FINISH

NOTES
ALL KERB RAMPS ARE TO BE ALIGNED WITH THE DESIRED DIRECTION OF PEDESTRIAN TRAVEL.
REFER TO "DESIRABLE KERB RAMP LAYOUTS" ON PCC STANDARD DRAWING DS4

DETAIL 2 - TYPICAL KERB RAMP 1.2m WIDE

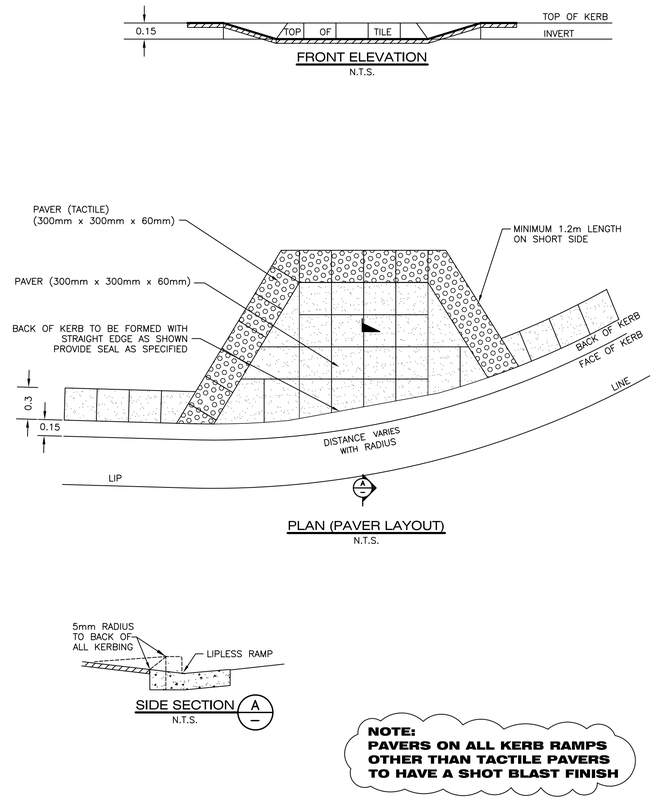

NOTE: PAVERS ON ALL KERB RAMPS OTHER THAN TACTILE PAVERS TO HAVE A SHOT BLAST FINISH

NOTES
ALL KERB RAMPS ARE TO BE ALIGNED WITH THE DESIRED DIRECTION OF PEDESTRIAN TRAVEL.
REFER TO "DESIRABLE KERB RAMP LAYOUTS" ON PCC STANDARD DRAWING DS4

DETAIL 3 - TYPICAL KERB RAMP ON CURVE

AMENDMENTS		
No.	DETAIL	DATE
	ADDITIONAL NOTES	30.9.04
	NOTES REVISED	NOV.07
	NOTES AND DETAILS REVISED	SEP.09

STATUS: **APPROVED**
Scale: N.T.S
DESIGNED ...../...../.....
ASSET OWNER ...../...../.....
DESIGN CHECKED & APPROVED ...../...../.....
MANAGER CAPITAL PROJETS ...../...../.....

PARRAMATTA CITY COUNCIL

SECONDARY TREATMENT AND NEIGHBOURHOOD CENTRE PAVING DESIGN AND SPECIFICATION

SPECIFICATION NOTES AND DETAILS

PLAN NUMBER
DS41
Sheet No : 1 of 2
Revision :

SECONDARY TREATMENT AND NEIGHBOURHOOD CENTRE PAVING DESIGN AND SPECIFICATION

NOTE: THE PROJECT SPECIFIC DESIGN/PAVEMENT PLAN ALWAYS TAKES PRECEDENCE OVER DS41 STANDARD PAVEMENT SETOUT. DS41 MUST ALWAYS BE READ IN CONJUNCTION WITH THE APPROVED PROJECT SPECIFIC DESIGN/PAVEMENT PLAN.

PRELIMINARIES:

- PRIOR TO COMMENCING THE PROJECT THE CONTRACTOR IS TO LOCATE ALL SERVICES IN AREAS WHERE EXCAVATION IS TO OCCUR.
- A TRAFFIC CONTROL PLAN IS TO BE PREPARED AND APPROVED BY THE RTA PRIOR TO WORK COMMENCING.
- EXISTING FOOTPATH PAVEMENT MATERIAL (WHETHER PAVERS, ASPHALT OR CONCRETE) IS TO BE EXCAVATED. MATERIAL MUST BE REMOVED FROM SITE.
- ANY KERB AND GUTTER TO BE REPLACED IS TO BE REMOVED FROM SITE AND ROAD PAVEMENT RESTORED IN ACCORDANCE WITH PCC STANDARD DETAIL DS1.

PAVER MATERIAL MANUFACTURER:

THE PAVING MATERIAL TO BE USED IS A PRECAST CONCRETE PAVER AS FABRICATED BY PEBBLECRETE INSITU PTY LTD (CONTACT: FRANK PIPERITA 9604 3100)

GENERAL PAVER DESCRIPTION:

BORDER PAVER – COLOUR 'SANDSTONE' PPX540:120D
- 300x300x60mm (TYPICAL PAVER SIZE)
- FINISH (HONED)

BORDER PAVER – COLOUR 'SANDSTONE' PPX540:120D
- 600x300x60mm (SPECIAL PAVER SIZE)
- FINISH (HONED)

KERB RAMP PAVER – COLOUR 'SANDSTONE' PPX540:120SB
- 300x300x60mm (TYPICAL PAVER SIZE)
- FINISH (SHOTBLAST)

KERB RAMP PAVER – COLOUR 'SANDSTONE' PPX540:120SB
- 600x300x60mm (SPECIAL PAVER SIZE)
- FINISH (SHOTBLAST)

TACTILE – COLOUR 'SANDSTONE' PPX540(TAC):120D
- 300x300x60mm (TYPICAL PAVER SIZE)
- FINISH (TACTILE)

TACTILE – COLOUR 'SANDSTONE' PPX540(TAC):120D
- 600x300x60mm (SPECIAL PAVER SIZE)
- FINISH (TACTILE)

EPPING PAVER DESCRIPTION:

BORDER PAVER – COLOUR 'TERRACOTTA' PPX670:120D
- 300x300x60mm (TYPICAL PAVER SIZE)
- FINISH (HONED)

BORDER PAVER – COLOUR 'TERRACOTTA' PPX670:120D
- 600x300x60mm (SPECIAL PAVER SIZE)
- FINISH (HONED)

KERB RAMP PAVER – COLOUR 'TERRACOTTA' PPX670:120SB
- 300x300x60mm (TYPICAL PAVER SIZE)
- FINISH (SHOTBLAST)

KERB RAMP PAVER – COLOUR 'TERRACOTTA' PPX670:120SB
- 600x300x60mm (SPECIAL PAVER SIZE)
- FINISH (SHOTBLAST)

TACTILE – COLOUR 'TERRACOTTA' PPX670(TAC):120D
- 300x300x60mm (TYPICAL PAVER SIZE)
- FINISH (TACTILE)

TACTILE – COLOUR 'TERRACOTTA' PPX670(TAC):120D
- 600x300x60mm (SPECIAL PAVER SIZE)
- FINISH (TACTILE)

HARRIS PARK PAVER DESCRIPTION:

BORDER PAVER 'TYPE 1' – COLOUR 'GREEN' PPX760:60'GREEN'
- 300x300x60mm (TYPICAL PAVER SIZE)
- FINISH (HONED)

BORDER PAVER 'TYPE 1' – COLOUR 'GREEN' PPX760:60'GREEN'
- 600x300x60mm (SPECIAL PAVER SIZE)
- FINISH (HONED)

BORDER PAVER 'TYPE 2' – COLOUR 'BLACK' PPX721:60"BLACK'
- 600x300x60mm (TYPICAL PAVER SIZE)
- FINISH (HONED)

ARTWORK PAVER – PPX825:60'ARTWORK (S–CURVE)'
- 600x300x60mm (TYPICAL PAVER SIZE)
- FINISH (HONED)

KERB RAMP PAVER – COLOUR 'GREEN' PPX760:60'GREEN'
- 300x300x60mm (TYPICAL PAVER SIZE)
- FINISH (SHOTBLAST)

KERB RAMP PAVER – COLOUR 'GREEN' PPX760:60'GREEN'
- 600x300x60mm (SPECIAL PAVER SIZE)
- FINISH (SHOTBLAST)

TACTILE – COLOUR 'BLACK' PPX721:45(TAC)'BLACK'
- 300x300x60mm (TYPICAL PAVER SIZE)
- FINISH (TACTILE)

TACTILE – COLOUR 'BLACK' PPX721:45(TAC)'BLACK'
- 600x300x60mm (SPECIAL PAVER SIZE)
- FINISH (TACTILE)

HERITAGE PAVER – 'MOUNT WHITE–WHITE' SANDSTONE PAVER
- 600x150X50mm

FIBRECRETE BLINDING LAYER:

PLACE 100mm THICK FIBRECRETE (25MPa) BLINDING LAYER WITH EQUIVALENT STRENGTH TO SL72 (INCLUDES TAPERED 600mm WIDE X 210mm DEEP EDGE BEAM UNDER BORDER PAVERS). PLACE FIBRECRETE BLINDING LAYER ON MINIMUM 50mm DEEP DGB20 TO 100% STANDARD DRY COMPACTION IN ACCORDANCE WITH AS1289.5.1.1. REFER TO DETAIL 7.
ANY SOFT SPOTS IN SUB–GRADE TO BE REMOVED AS DIRECTED BY COUNCIL'S PROJECT MANAGER.

ISOLATION JOINTS:

PLACE 10mm WIDE FULL DEPTH ABELFLEX FOAM EXPANSION JOINT BETWEEN FIBRECRETE BLINDING LAYER AND CONCRETE KERB AND FIBRECRETE BLINDING LAYER AND BUILDING LINE. ABELFLEX FOAM EXPANSION JOINT TO EXTEND TO 20mm BELOW FINISHED PAVER LEVEL TO ACCOMODATE 20mm DEEP DYNATRED SEALANT (SEE JOINTING BELOW). REFER TO DETAIL 7 AND 10.

EXPANSION JOINTS:

PLACE 10MM WIDE FULL DEPTH ABELFLEX FOAM EXPANSION JOINT PERPENDICULAR TO KERB AND BUILDING LINE AT EVERY 6.0m INTERVALS. REFER TO DETAIL 10.
WHERE WIDTH OF PAVEMENT (BETWEEN KERB AND BUILDING LINE) IS GREATER THAN 2.8m, PLACE 10mm WIDE FULL DEPTH ABELFLEX FOAM EXPANSION JOINT CENTRALLY IN FIBRECRETE BLINDING LAYER. REFER TO DETAIL 10.

CONTROL JOINTS:

PLACE 3–5mm WIDE x 25mm DEEP SAWCUT CONTROL JOINT PERPENDICULAR TO KERB AND BUILDING LINE AT EVERY 2.0m INTERVALS. REFER TO DETAIL 10.

SETOUT - PAVERS:

AS A GENERAL GUIDE ONLY, PAVERS SHALL BE SETOUT AS PER DIMENSIONS AND LOCATIONS AS SHOWN ON THIS SHEET (DS41 SHEET 1 & 2).

LAYING - PAVERS:

LAYING OF PAVERS IS TO COMMENCE FROM BACK OF KERB TOWARDS PROPERTY BOUNDARY. REFER TO DETAIL 6. ENSURE ALL PAVERS ARE FULLY BEDDED ON A 30mm THICK 3:1 SAND/CEMENT DRY MORTAR BED TOPPED WITH A 1:1 CEMENT/WATER SLURRY TO ACHIEVE BOND WITH PAVERS. SUPPORT ALL PAVERS ADJOINING ASPHALT INFILL WITH MORTAR HAUNCH. REFER TO DETAIL 7.
THE PAVERS ARE TO BE MANUALLY TAMPERED WITH A RUBBER MALLET INTO THE WET MORTAR. THE USE OF VIBRATING COMPACTION EQUIPMENT eg. WAKA PLATE, IS STRICTLY PROHIBITED.
WHERE PAVERS ARE TO BE LAID IN A RADIAL OR CURVE ALIGNMENT, PAVERS TO BE CUT RADIAL TO CENTRE. REFER TO DETAIL 5. ALL PAVERS TO BE LAID LEVEL TO THOSE ADJACENT TO AVOID TRIP HAZARDS.
MINIMUM PAVER WIDTH IS TO BE 100mm. USE 600 x 300mm PAVER WHERE REQUIRED TO AVOID SLIVERS (ie LESS THAN 100mm) OR TO MINIMISE GAP ON CURVES. REFER TO DETAIL 5 AND 6.

ASPHALT INFILL:

PLACE ASPHALT IN 3 LAYERS OF AC10–LIGHT. COMPACT ASPHALT IN LAYERS WITH VIBRATING COMPACTION EQUIPMENT eg. WAKA PLATE OR APPROVED EQUIVALENT (DO NOT COMPACT OVER PAVERS). TEMPERATURE OF ASPHALT WHEN LAYING TO BE 165–180°C. REFER TO DETAIL 7.
APPLY 2 COATS OF 'BORAL SURFACE COAT' (COLOUR: BLACK) TO TOP OF ASPHALT SURFACE. APPLY TO MANUFACTURERS SPECIFICATIONS. PAVERS BORDERING ASPHALT INFILL SHOULD BE BORDERED WITH A PAVEMENT TAPE SUCH AS MASKING TAPE TO ENSURE A NEAT, CLEAN EDGE BETWEEN PAVERS AND ASPHALT/SURFACE COAT FINISH.
NOTE: A COPY OF 'BORAL SURFACE COAT' SPECIFICATION AND APPLICATION NOTES WILL BE SUPPLIED TO THE CONTRACTOR BY COUNCIL'S PROJECT MANAGER.

JOINTING:

BETWEEN INDIVIDUAL PAVERS – PAVERS ARE TO BUTT JOIN FLUSH TOGETHER TO FORM AN EVEN SURFACE AS TO AVOID TRIP HAZARDS. THE JOINTS BETWEEN PAVERS ARE TO BE FILLED WITH ULTRA FINE SILICA SAND AS SUPPLIED BY BENEDICTS SAND AND SOIL (ph.9986 3500) OR AN APPROVED EQUIVALENT.
BETWEEN PAVERS AND CONCRETE KERB AND BUILDING LINE – FILL 20mm GAP WITH SEAL. SEALANT MATERIAL TO BE 'DYNATRED' (COLOUR: BLACK) AS SUPPLIED BY HB FULLER AUSTRALIA (ph. 1800 423 855) OR AN APPROVED EQUIVALENT. REFER TO DETAIL 7.

PRAM RAMP:

GENERALLY PRAM RAMPS ARE TO BE SETOUT AS SHOWN IN DETAILS 1, 2 AND 3. WHERE ANY CHANGES TO ANY OF THE DETAILS ARE REQUIRED, MINIMUM PAVER WIDTH IS TO BE 100mm. USE 600 x 300mm PAVER WHERE REQUIRED TO AVOID SLIVERS (ie LESS THAN 100mm). CONFIRMATION FROM COUNCIL'S PROJECT MANAGER IS REQUIRED PRIOR TO CONSTRUCTION.
NOTE: PRAM RAMP PAVERS ON KERB RAMP TO BE 'SHOT BLAST' FINISH

ROOF OUTLETS:

WHERE ROOF OUTLET CONNECTIONS ARE TO BE PROVIDED USE 150mm x 90mm GALVANISED STEEL RECTANGULAR HOLLOW SECTION. WHERE MORTAR COVER CANNOT BE ACHIEVED PAVERS ARE TO BE GLUED TO STEEL SECTION AS REQUIRED WITH HIGH STRENGTH EPOXY ADHESIVE.

SERVICE LID TREATMENT:

REPLACE ALL EXISTING SERVICE LIDS WITH CAST IRON COVERS AND FRAMES (DIAMOND PATTERN OR APPROVED EQUIVALENT).
NEW SERVICE LIDS ARE TO BE PRE APPROVED BY THE APPROPRIATE AUTHORITY.
ADJUST HEIGHT OF PIT FRAME/LID AS REQUIRED TO SUIT NEW WORK.
PROVIDE 10mm WIDE DYNATRED SEAL (COLOUR: BLACK) AROUND PERIMETER OF SERVICE PIT LID/FRAME.

CLEANING OF PAVERS:

ALL PAVERS LAID DURING THE COURSE OF ONE WORKING DAY MUST BE CLEANED AT THE END OF THAT DAY BEFORE PROCEEDING WITH LAYING OF SUBSEQUENT PAVERS. THIS IS TO PREVENT CEMENT, ASPHALT AND SURFACE COATING RESIDUE BUILD UP ON PAVERS WHICH MAY BECOME DIFFICULT TO CLEAN IF LEFT OVERNIGHT OR FOR PROLONGED PERIODS.

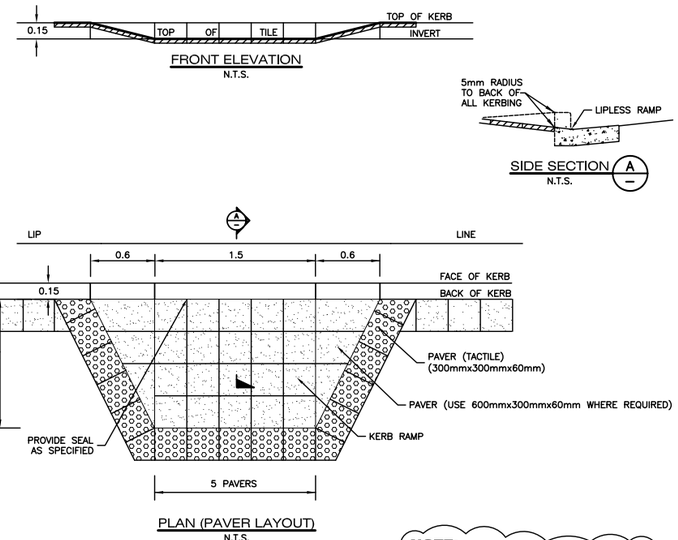

NOTE: PAVERS ON ALL KERB RAMPS OTHER THAN TACTILE PAVERS TO HAVE A SHOT BLAST FINISH

NOTES
ALL KERB RAMPS ARE TO BE ALIGNED WITH THE DESIRED DIRECTION OF PEDESTRIAN TRAVEL.
REFER TO "DESIRABLE KERB RAMP LAYOUTS" ON PCC STANDARD DRAWING DS4

DETAIL 1 - TYPICAL KERB RAMP 1.5m WIDE

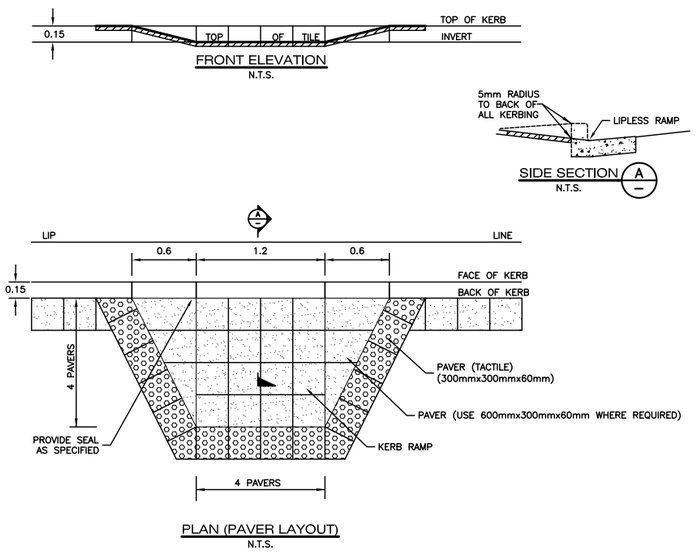

NOTE: PAVERS ON ALL KERB RAMPS OTHER THAN TACTILE PAVERS TO HAVE A SHOT BLAST FINISH

NOTES
ALL KERB RAMPS ARE TO BE ALIGNED WITH THE DESIRED DIRECTION OF PEDESTRIAN TRAVEL.
REFER TO "DESIRABLE KERB RAMP LAYOUTS" ON PCC STANDARD DRAWING DS4

DETAIL 2 - TYPICAL KERB RAMP 1.2m WIDE

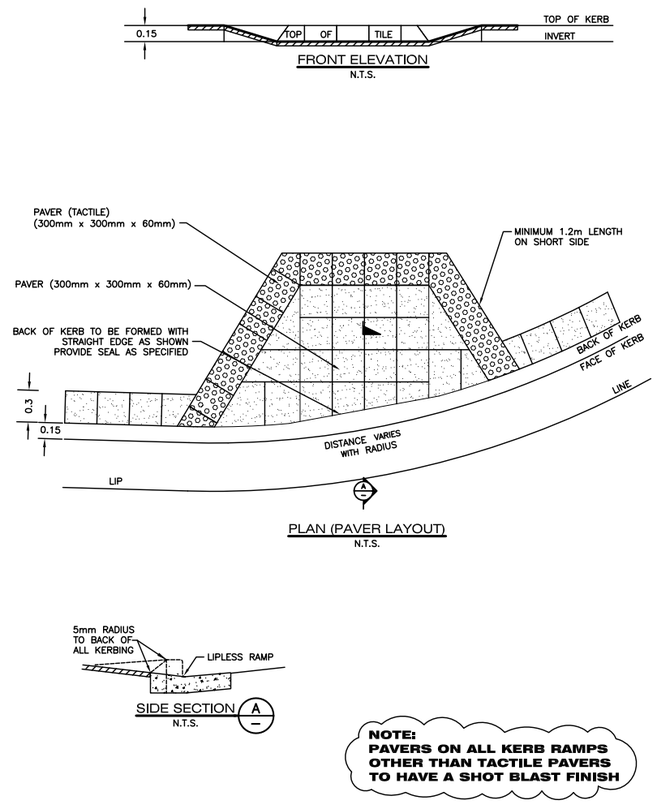

NOTE: PAVERS ON ALL KERB RAMPS OTHER THAN TACTILE PAVERS TO HAVE A SHOT BLAST FINISH

NOTES
ALL KERB RAMPS ARE TO BE ALIGNED WITH THE DESIRED DIRECTION OF PEDESTRIAN TRAVEL.
REFER TO "DESIRABLE KERB RAMP LAYOUTS" ON PCC STANDARD DRAWING DS4

DETAIL 3 - TYPICAL KERB RAMP ON CURVE

AMENDMENTS		
No.	DETAIL	DATE
	ADDITIONAL NOTES	30.9.04
	NOTES REVISED	NOV.07
	NOTES AND DETAILS REVISED	SEP.09

STATUS: **APPROVED**

Scale: N.T.S

DESIGNED ..../...../.....

ASSET OWNER ..../...../.....

DESIGN CHECKED & APPROVED ..../...../.....

MANAGER CAPITAL PROJETS ..../...../.....

PARRAMATTA CITY COUNCIL

SECONDARY TREATMENT AND NEIGHBOURHOOD CENTRE PAVING DESIGN AND SPECIFICATION

SPECIFICATION NOTES AND DETAILS

PLAN NUMBER

DS41

Sheet No : 1 of 2

Revision :

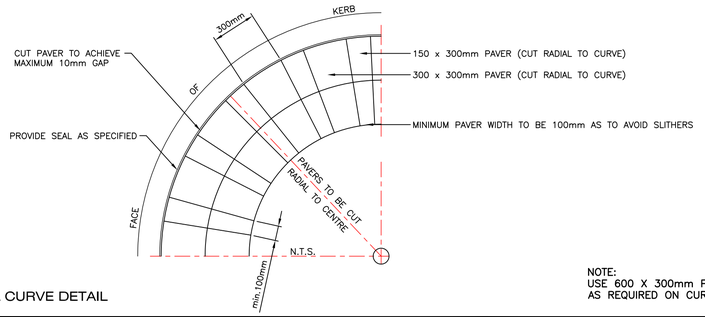

NOTE:
USE 600 X 300mm PAVERS AS REQUIRED ON CURVE

DETAIL 5 - TYPICAL CURVE DETAIL

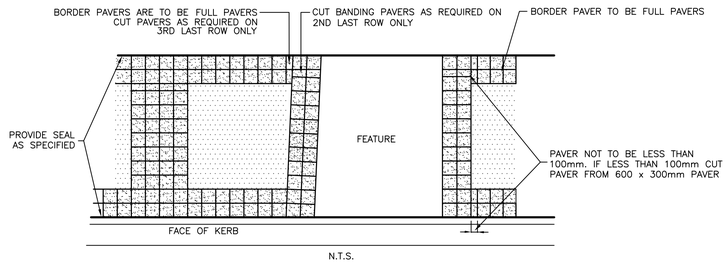

DETAIL 6 - USAGE 600mm x 300mm PAVER (TO AVOID SLIVERS)

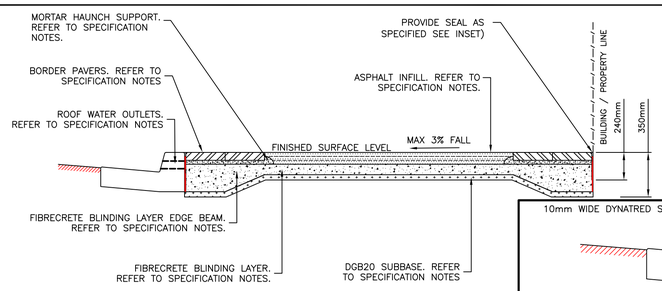

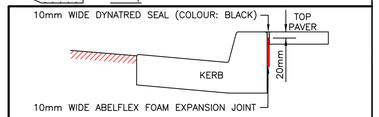

INSET

DETAIL 7 - TYPICAL PAVEMENT DETAIL (SECONDARY TREATMENT)
REFER TO SPECIFICATION NOTES (DS41 SHEET 1)

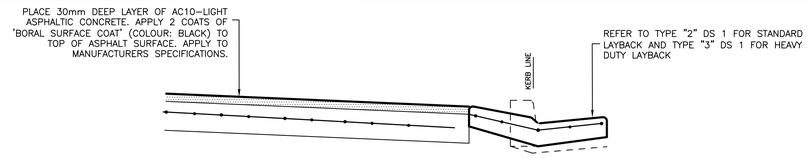

SECTION A-A

EXISTING CONCRETE DRIVEWAY TREATMENT.
SCABBLE 30mm OFF TOP OF EXISTING CONCRETE DRIVEWAY AND RESHEET WITH 30mm DEEP AC10–LIGHT ASPHALTIC CONCRETE. APPLY 2 COATS OF 'BORAL SURFACE COAT' (COLOUR: BLACK) TO TOP OF ASPHALT SURFACE. APPLY TO MANUFACTURERS SPECIFICATIONS.

NOTE
FOR DRIVEWAY LAYOUT REFER TO PCC STANDARD DRAWING DS9

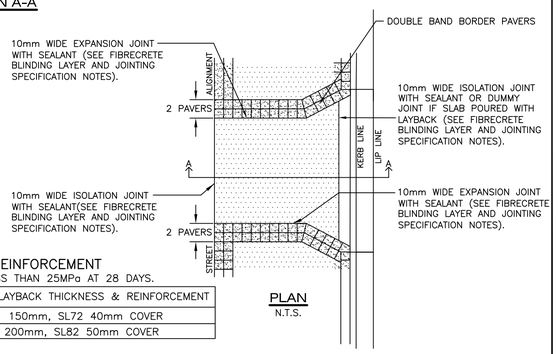

PLAN
N.T.S.

TABLE OF SLAB THICKNESS AND REINFORCEMENT
COMPRESSIVE STRENGTH OF CONCRETE TO BE NOT LESS THAN 25MPa AT 28 DAYS.

CROSSING TYPE	SLAB THICKNESS & REINFORCEMENT	LAYBACK THICKNESS & REINFORCEMENT
RESIDENTIAL	150mm, SL72 40mm COVER	150mm, SL72 40mm COVER
COMMERCIAL	200mm, SL82 50mm COVER	200mm, SL82 50mm COVER

NOTE
SL72 OR SL82 STRENGTH FIBRECRETE EQUIVALENT MAY BE USED.

DETAIL 8 - TYPICAL DRIVEWAY TREATMENT

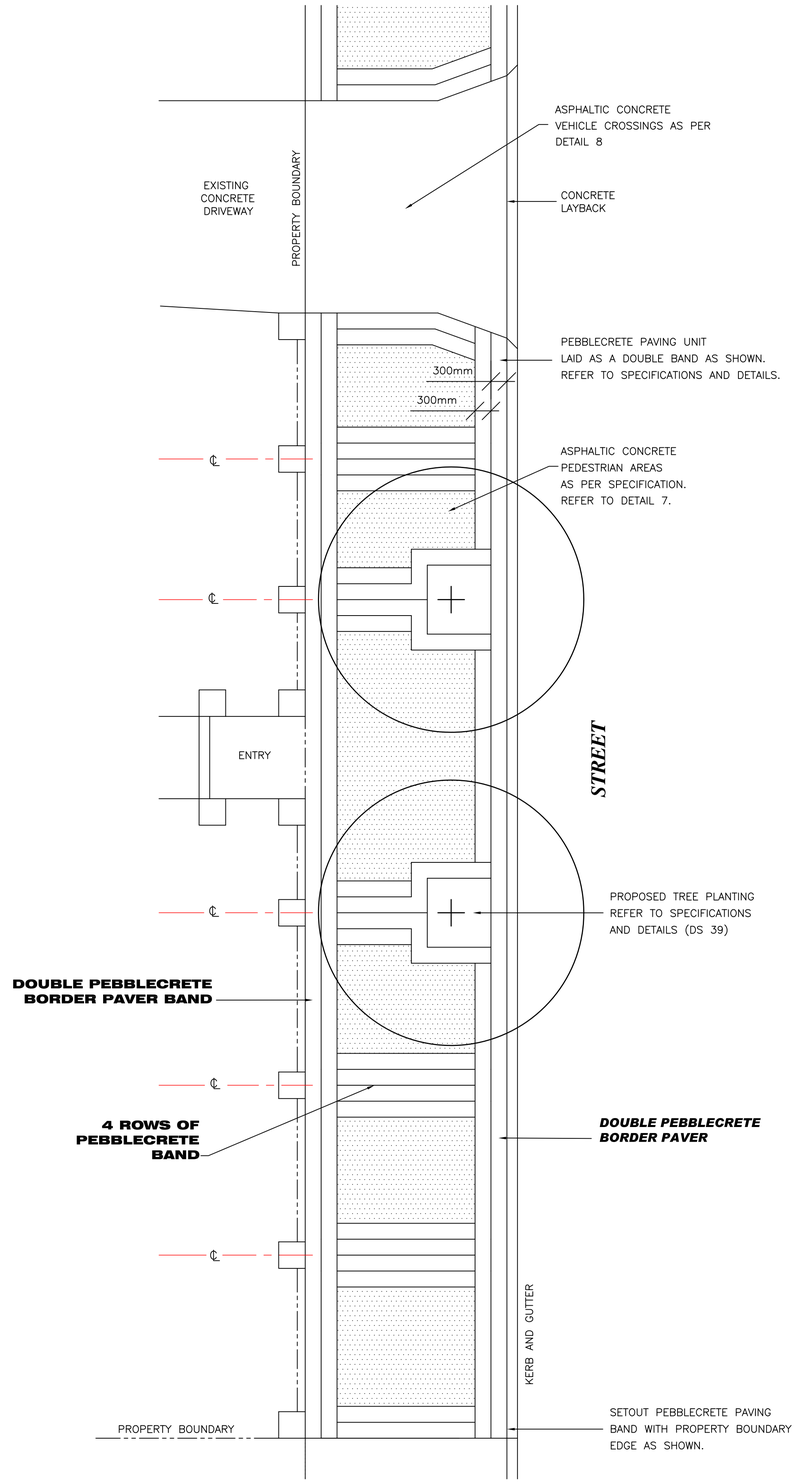

DETAIL 9 - TYPICAL SECONDARY STREET TREATMENT LAYOUT

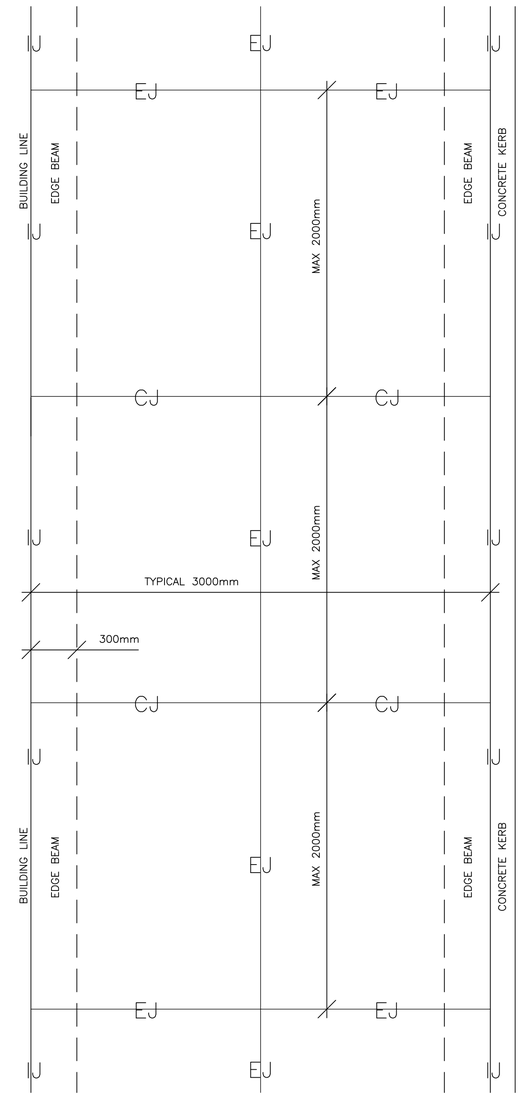

KEY
IJ – ISOLATION JOINT
EJ – EXPANSION JOINT
CJ – CONTROL JOINT

DETAIL 10 - TYPICAL FIBRECRETE BLINDING LAYER JOINTING

AMENDMENTS		
No.	DETAIL	DATE
	CHANGES TO DETAILS	30.9.04
	DETAILS AND NOTES REVISED	NOV.07
	DETAILS AND NOTES REVISED	SEP.09

STATUS: **APPROVED**
Scale: N.T.S.
DESIGNED ...../...../.....
ASSET OWNER ...../...../.....
DESIGN CHECKED & APPROVED ...../...../.....
MANAGER CAPITAL PROJETS ...../...../.....

PARRAMATTA CITY COUNCIL

SECONDARY TREATMENT AND NEIGHBOURHOOD CENTRE PAVING DESIGN AND SPECIFICATION

SPECIFICATION NOTES AND DETAILS

PLAN NUMBER
DS41
Sheet No : 2 of 2
Revision :

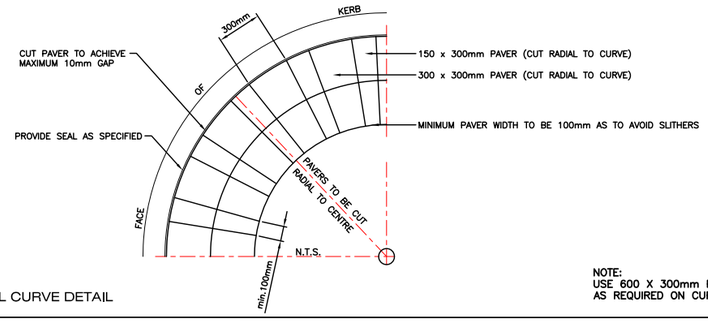

NOTE:
USE 600 X 300mm PAVERS AS REQUIRED ON CURVE

DETAIL 5 - TYPICAL CURVE DETAIL

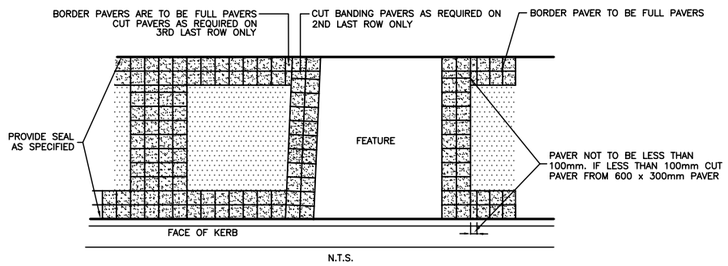

DETAIL 6 - USAGE 600mm x 300mm PAVER (TO AVOID SLIVERS)

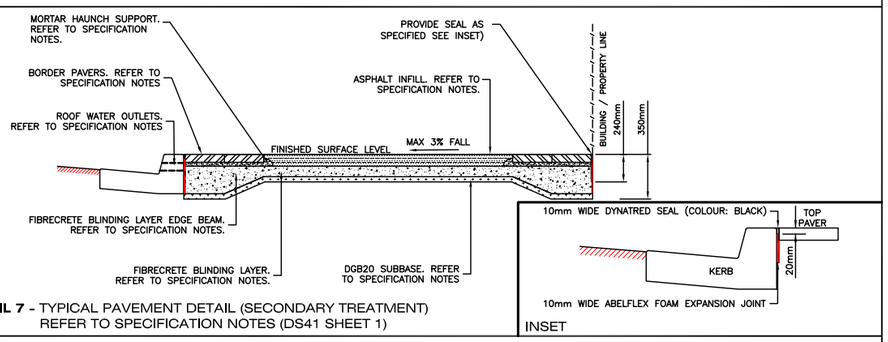

DETAIL 7 - TYPICAL PAVEMENT DETAIL (SECONDARY TREATMENT)
REFER TO SPECIFICATION NOTES (DS41 SHEET 1)

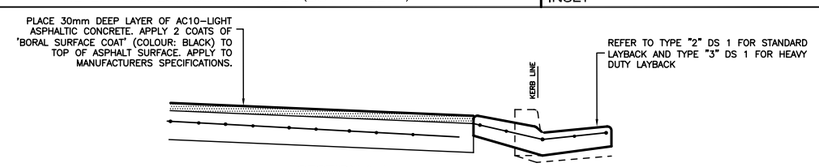

SECTION A-A

EXISTING CONCRETE DRIVEWAY TREATMENT.
SCABBLE 30mm OFF TOP OF EXISTING CONCRETE DRIVEWAY AND RESHEET WITH 30mm DEEP AC10-LIGHT ASPHALTIC CONCRETE. APPLY 2 COATS OF 'BORAL SURFACE COAT' (COLOUR: BLACK) TO TOP OF ASPHALT SURFACE. APPLY TO MANUFACTURERS SPECIFICATIONS.

NOTE
FOR DRIVEWAY LAYOUT REFER TO PCC STANDARD DRAWING DS9

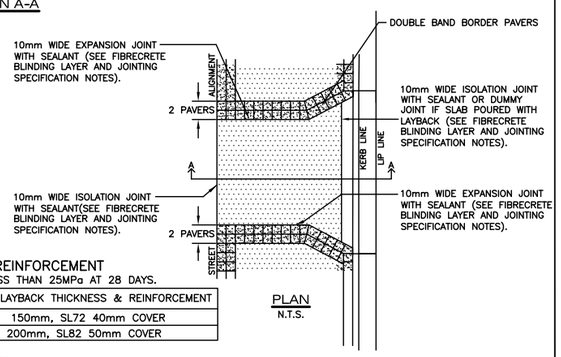

PLAN
N.T.S.

TABLE OF SLAB THICKNESS AND REINFORCEMENT
COMPRESSIVE STRENGTH OF CONCRETE TO BE NOT LESS THAN 25MPa AT 28 DAYS.

CROSSING TYPE	SLAB THICKNESS & REINFORCEMENT	LAYBACK THICKNESS & REINFORCEMENT
RESIDENTIAL	150mm, SL72 40mm COVER	150mm, SL72 40mm COVER
COMMERCIAL	200mm, SL82 50mm COVER	200mm, SL82 50mm COVER

NOTE
SL72 OR SL82 STRENGTH FIBRECRETE EQUIVALENT MAY BE USED.

DETAIL 8 - TYPICAL DRIVEWAY TREATMENT

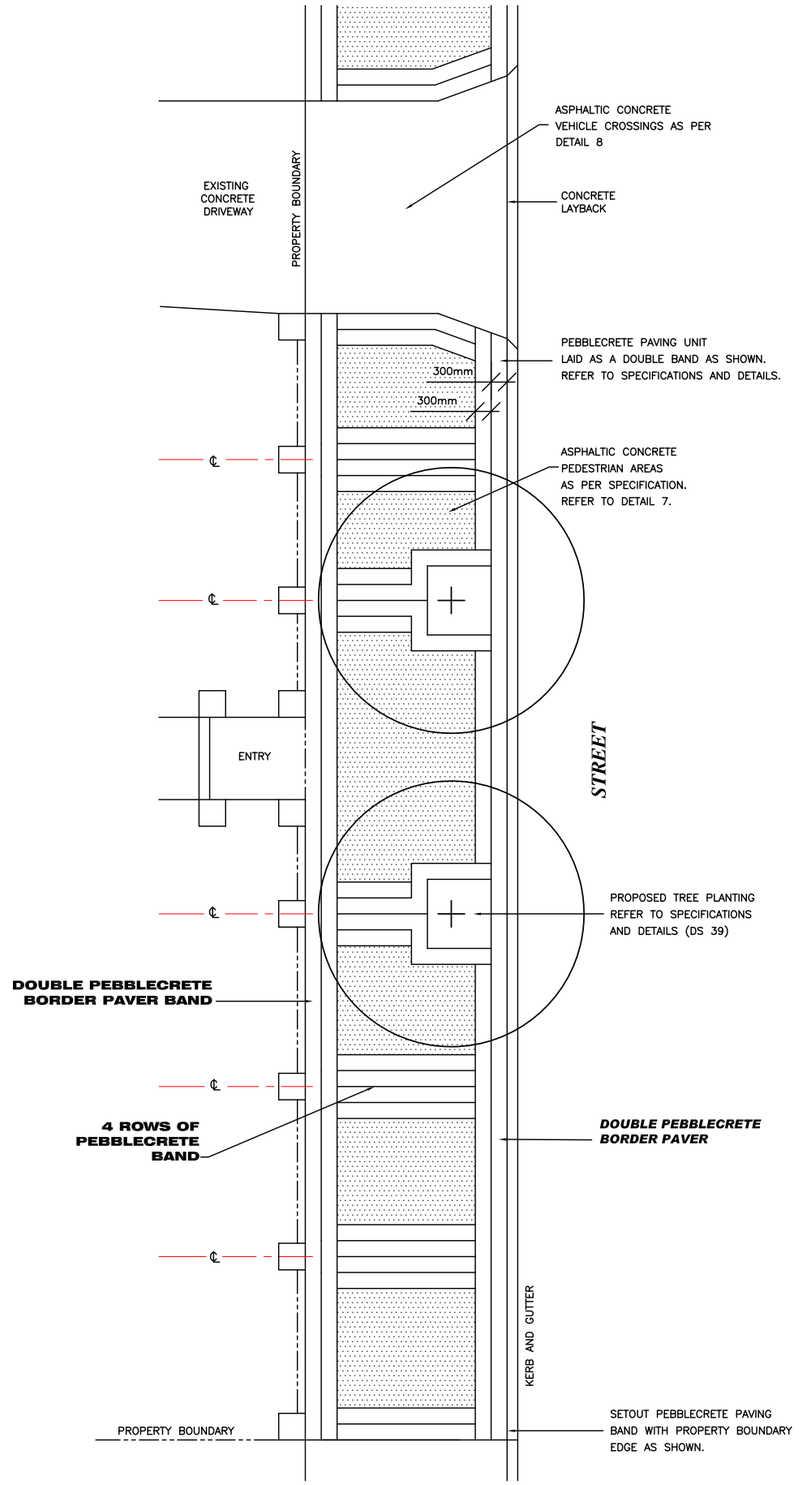

DETAIL 9 - TYPICAL SECONDARY STREET TREATMENT LAYOUT

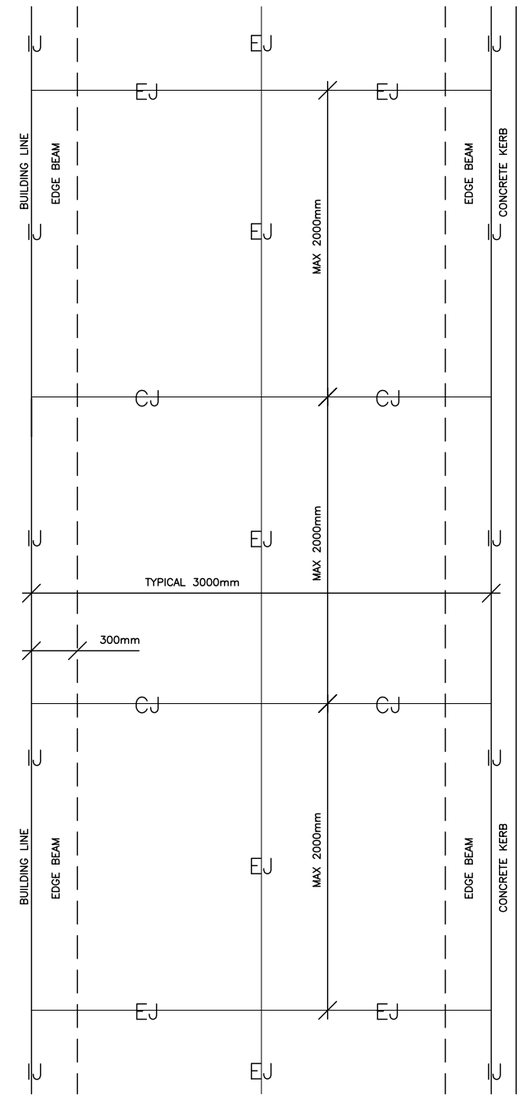

KEY
IJ – ISOLATION JOINT
EJ – EXPANSION JOINT
CJ – CONTROL JOINT

DETAIL 10 - TYPICAL FIBRECRETE BLINDING LAYER JOINTING

AMENDMENTS		
No.	DETAIL	DATE
	CHANGES TO DETAILS	30.9.04
	DETAILS AND NOTES REVISED	NOV.07
	DETAILS AND NOTES REVISED	SEP.09

STATUS: **APPROVED**
Scale: N.T.S.
DESIGNED ...../...../.....
ASSET OWNER ...../...../.....
DESIGN CHECKED & APPROVED ...../...../.....
MANAGER CAPITAL PROJETS ...../...../.....

PARRAMATTA CITY COUNCIL

SECONDARY TREATMENT AND NEIGHBOURHOOD CENTRE PAVING DESIGN AND SPECIFICATION

SPECIFICATION NOTES AND DETAILS

PLAN NUMBER
DS41
Sheet No : 2 of 2
Revision :

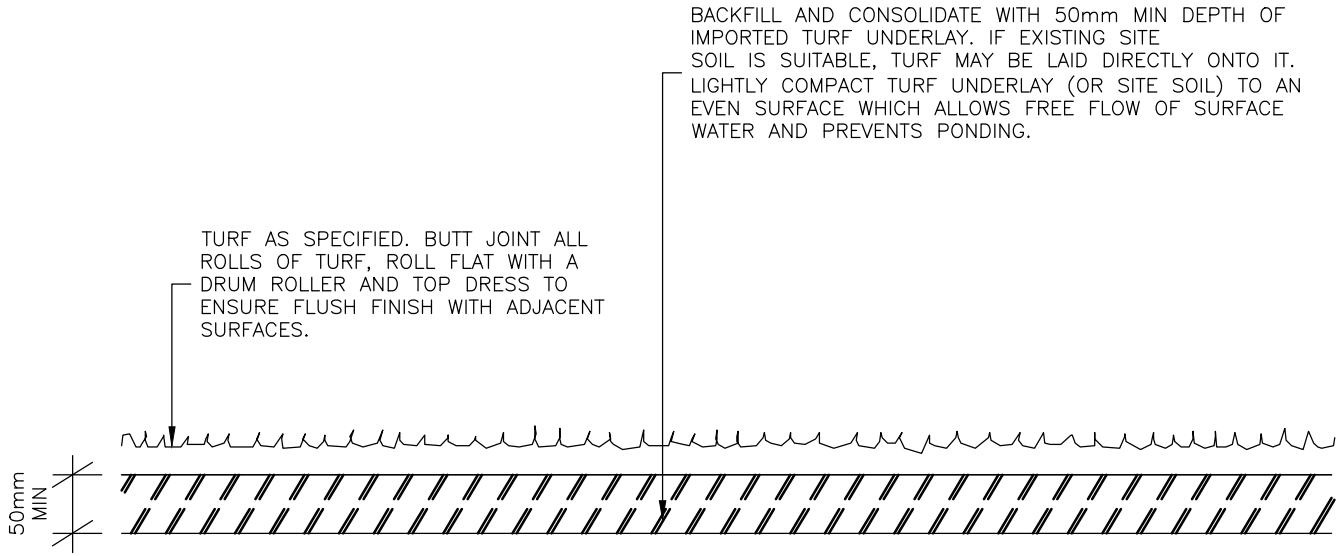

TURFING DETAIL
TYPICAL SECTION
N.T.S

AMENDMENTS			
No.	DETAIL	DATE	CHECKED

DESIGNED / DRAWN Date:

DESIGN CHECKED & APPROVED Date:

MANAGER CAPITAL PROJECTS Date:

Scale: AS SHOWN **FINAL**

ASSET OWNER Date:

GROUP MANAGER CITY ASSETS & ENVIRONMENT Date:

CITY OF PARRAMATTA COUNCIL

TURFING DETAIL

TYPICAL SECTION

PLAN N° DS42

Sheet No : 1 of 1

Revision :

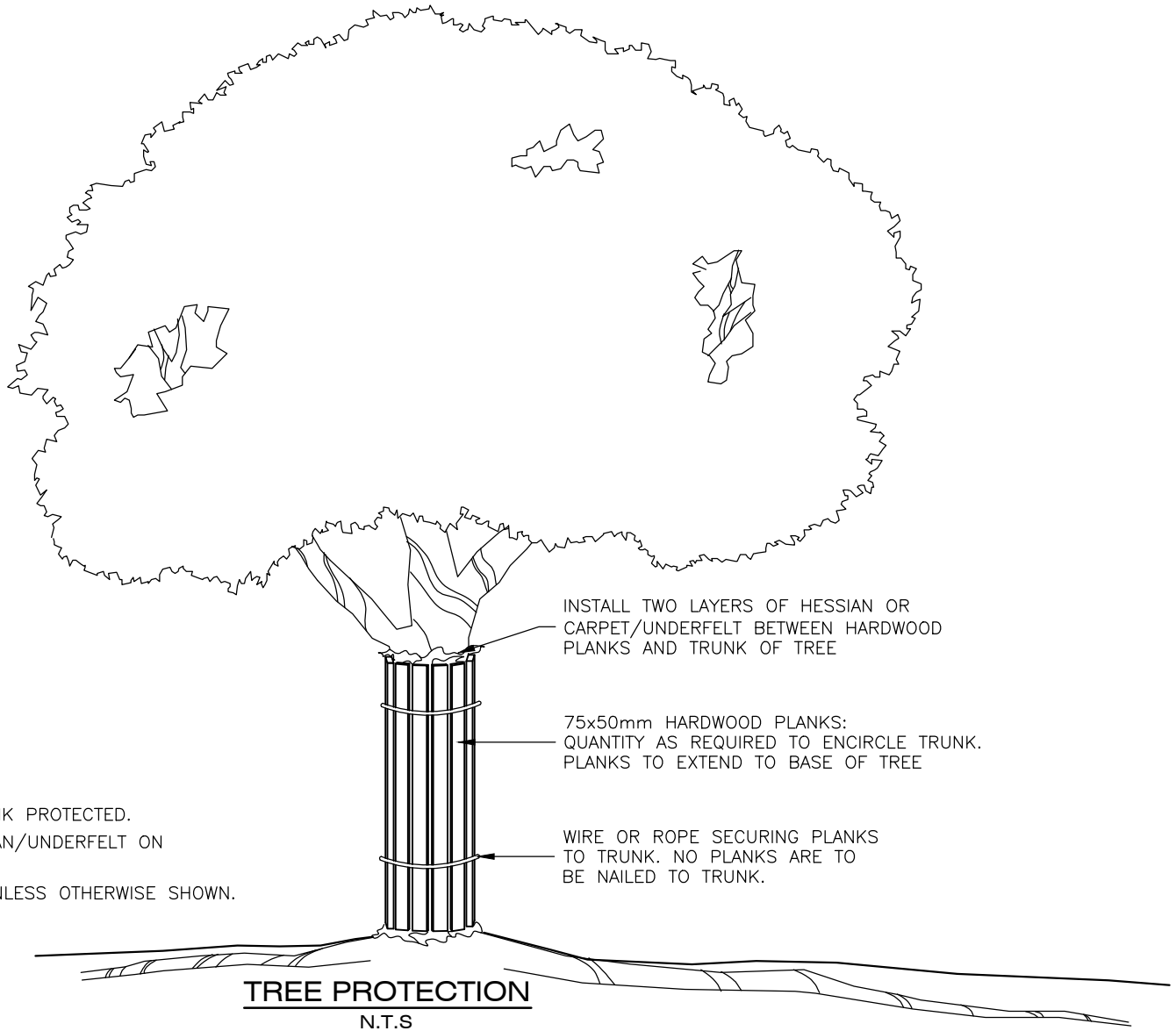

NOTES

1. MULTI–STEM TREES TO HAVE EACH TRUNK PROTECTED.
2. REMOVE HARDWOOD PLANKS AND HESSIAN/UNDERFELT ON COMPLETION OF ALL CONSTRUCTION.
3. ALL DIMENSIONS ARE IN MILLIMETRES UNLESS OTHERWISE SHOWN.

TREE PROTECTION

N.T.S

AMENDMENTS			
No.	DETAIL	DATE	CHECKED

DESIGNED / DRAWN Date:

DESIGN CHECKED & APPROVED Date:

MANAGER CAPITAL PROJECTS Date:

Scale: N.T.S **FINAL**

ASSET OWNER Date:

GROUP MANAGER CITY ASSETS & ENVIRONMENT Date:

CITY OF PARRAMATTA COUNCIL

TREE PROTECTION
TIMBER HOARDING

SECTION AND NOTES

PLAN N°
DS43

Sheet No : 1 of 1

Revision :

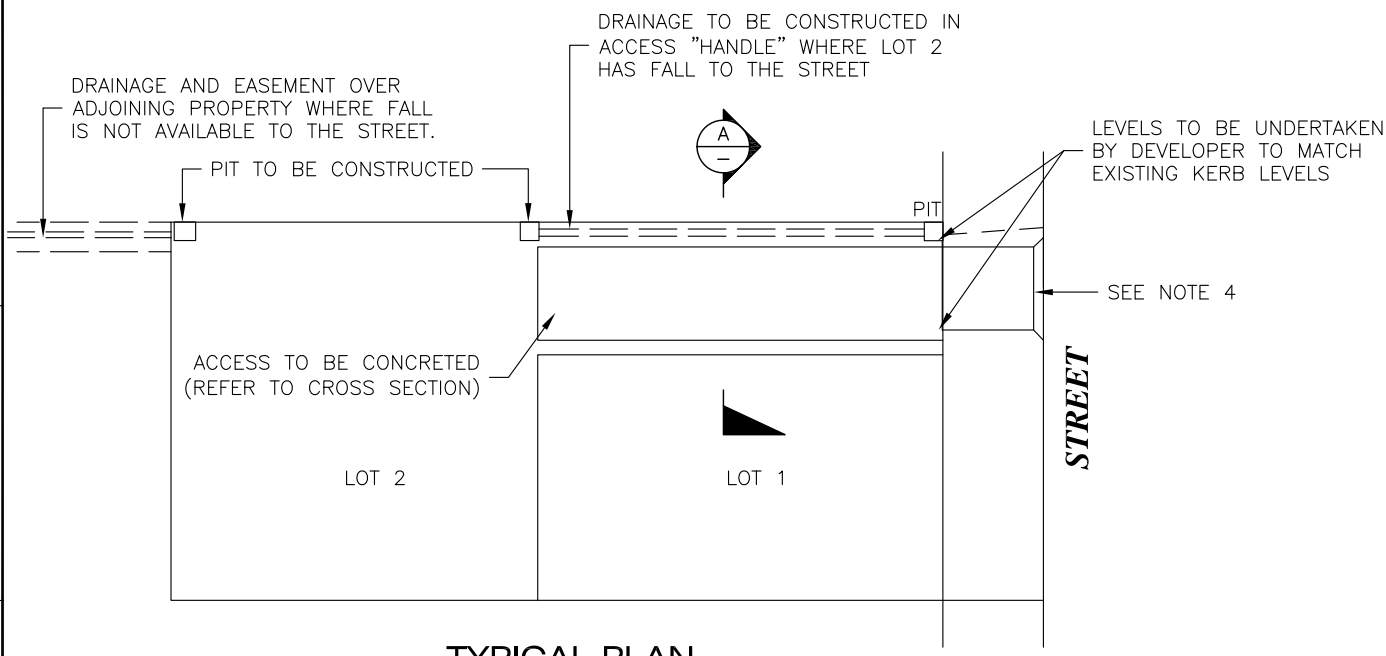

TYPICAL PLAN

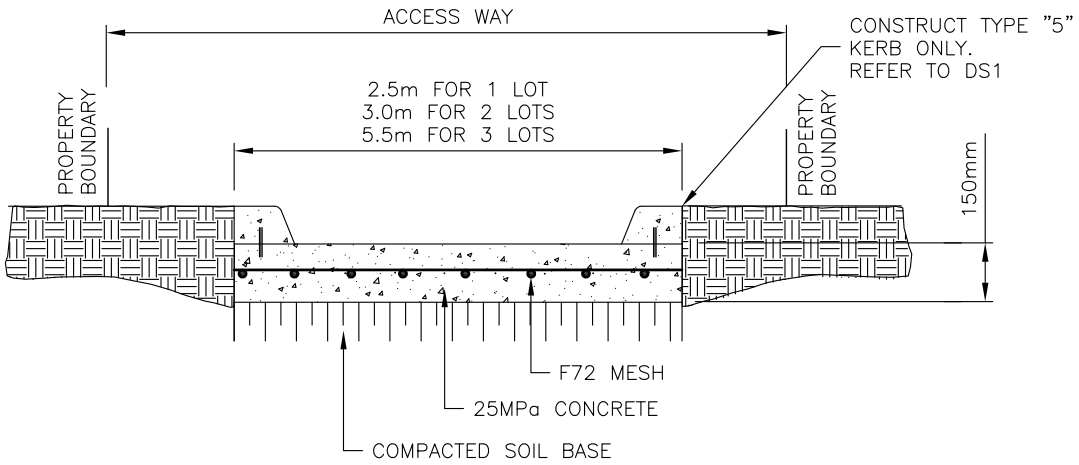

TYPICAL CROSS SECTION A-A

NOTES

SUMMARY OF REQUIREMENTS

1. PLAN TO BE SUBMITTED TO MINIMUM SCALE OF 1:200 SHOWING PLAN, LONG SECTION AND TYPICAL CROSS SECTION.
2. DRAINAGE OF LOTS ACCORDING TO FALL OF LAND. EASEMENTS MAY HAVE TO BE CREATED. (SEE DETAIL ABOVE).
3. ACCESS TO NEW BATTLE AXE LOTS TO BE CONCRETED (REFER TO CROSS SECTION ABOVE).
4. CROSSING AND LAYBACK TO BE CONSTRUCTED IN ACCORDANCE WITH COUNCILS STANDARD DRAWING DS8 (APPLICATION IS TO BE MADE TO COUNCIL FOR CONSTRUCTION OF VEHICULAR FOOTPATH CROSSING).
5. WHEN MORE THAN THREE BATTLE AXE LOTS ARE CREATED, ACCESS STANDARDS ARE TO BE DISCUSSED WITH PCC ENGINEERING DEPARTMENT.
6. CONSTRUCT TYPE "5" KERB ONLY. REFER TO STANDARD DRAWING DS1

STATUS **APPROVED**	Scale: N.T.S.	**PARRAMATTA CITY COUNCIL**	PLAN N°
DESIGNED Date:	ASSET OWNER Date:	ACCESS TO MULTI LOTS AND DRAINAGE REQUIREMENTS	DS44
DESIGN CHECKED & APPROVED Date:	MANAGER CAPITAL PROJECTS Date:	PLAN, CROSS SECTIONS AND NOTES	Sheet No : 1 of 1
			Revision :

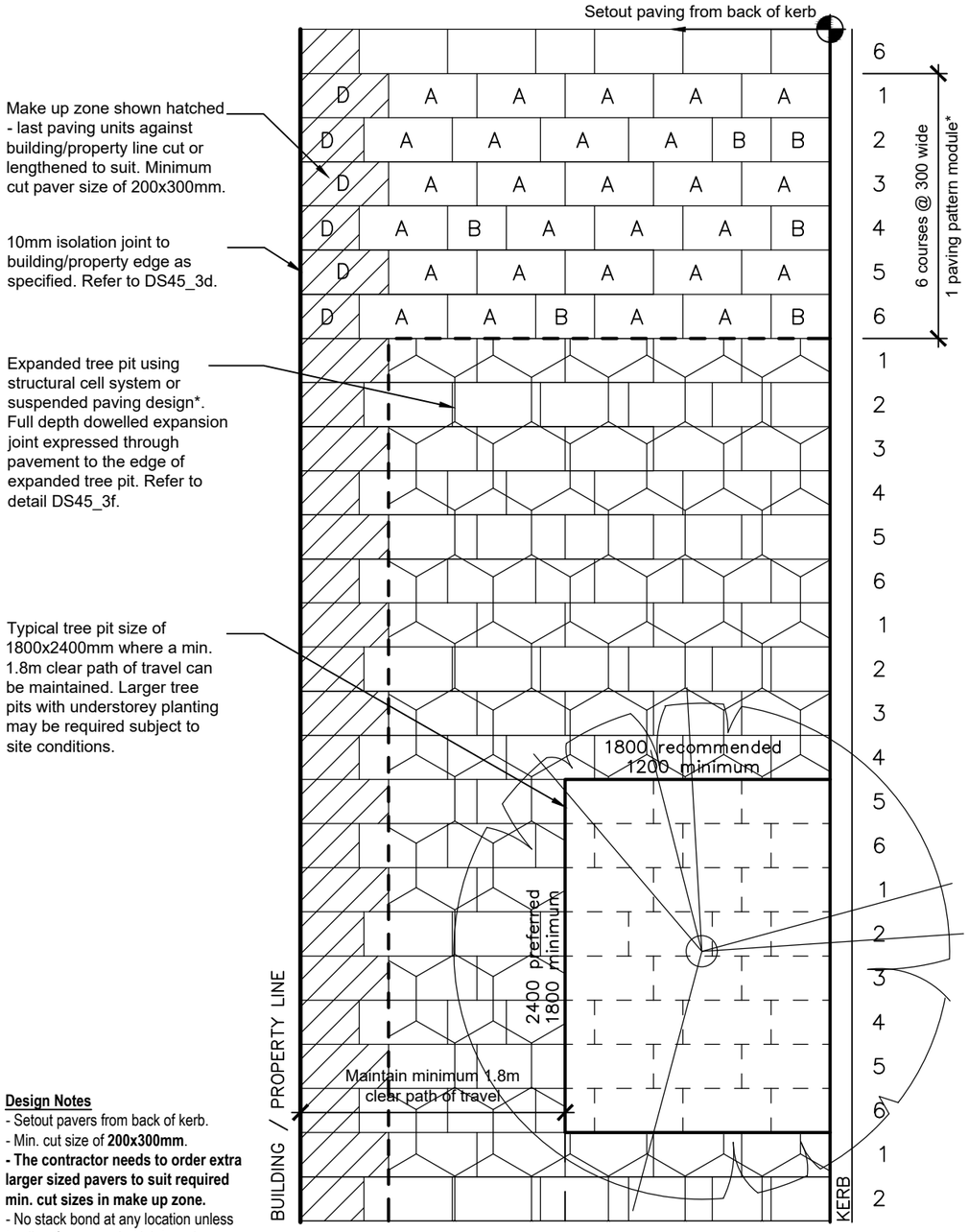

Design Notes
- Setout pavers from back of kerb.
- Min. cut size of **200x300mm**.
- **The contractor needs to order extra larger sized pavers to suit required min. cut sizes in make up zone.**
- No stack bond at any location unless to allow for expansion joint as shown.

Detail 1a: Typical Footpath Paving Layout _Full Granite Treatment
SCALE 1:40 @ A3

**** Notes** - expanded tree pit using structural cells or suspended paving design under the footpath is required to provide satisfactory uncompacted soil volume to street trees in a fully paved footpath. If structural support to paving is not provided, a large, uncompacted, planted tree pit opening in the footpath is required. Refer to the Public Domain Guidelines for recommended tree pit dimensions and soil volumes fro trees and liaise with council officers to achieve an approved detail design for street trees.

**** Notes** - At Signalised Intersection, Kerb Ramps to comply with RMS approved Traffic Signal Design Plan and RMS Standards

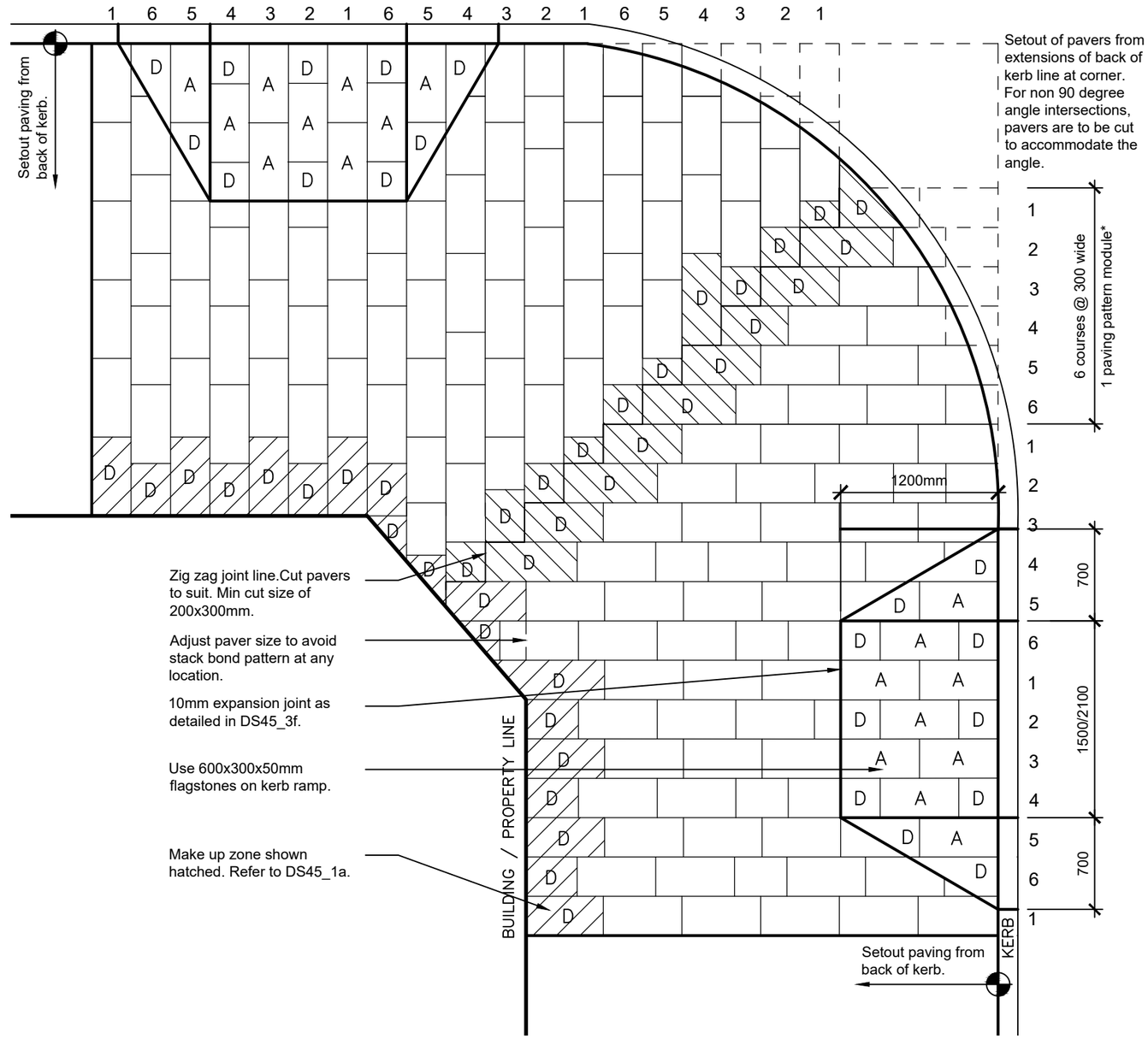

Detail 1b: Typical Street Corner Paving Layout_Full Granite Treatment
SCALE 1:40 @ A3

All measurement shown are in millimeters, unless otherwise stated

APPROVED - NOT FOR CONSTRUCTION

GRANITE FOOTPATH PAVING DETAILS
REVISION DATE: FEBRUARY 2020
STANDARD DETAIL: DS45 (Sheet 1 OF 7)

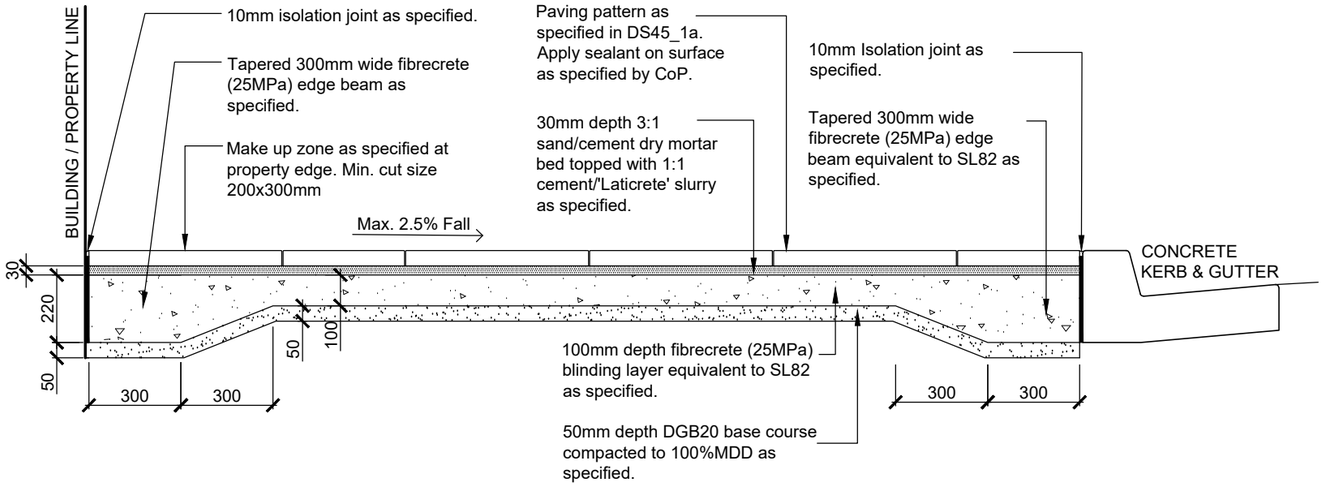

Detail 2a: Typical Footpath Cross Section_Full Granite Treatment
SCALE 1:20 @ A3

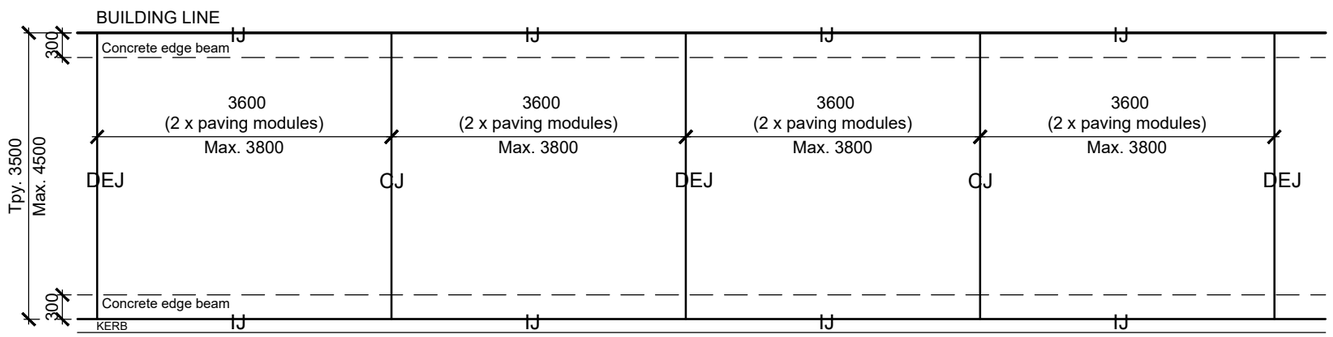

Note: this is typical design only, subject to final site specific engineering detail.

IJ - Isolation Joint
10mm wide x full depth foam expansion joint, Ableflex or form expansion joint to extend to 20mm below FFL to accommodate 20mm depth black silicone joint sealant. Refer to DS45_3d.

EJ - Expansion Joint
10mm wide x full depth subsurface foam expansion joint, Ableflex or similar approved. Finish foam expansion material 20mm below FFL to allow for 20mm depth black silicone joint sealant. Refer to DS45_3e.

DEJ - Dowelled Expansion Joint
300mm long R16 galvanised dowels capped and installed at 600mm centres perpendicular to expansion joint and parallel to pavement centreline and finished surface. Use of proprietary sleeve may be required. Refer to DS45_3f.

CJ - Control Joints (in fibrecrete blinding layer)
3mm wide x 25mm deep sawcut control joint.

Detail 2b: Typical Concrete Joint Layout on Footpath – Full Granite Treatment
SCALE 1:75 @ A3

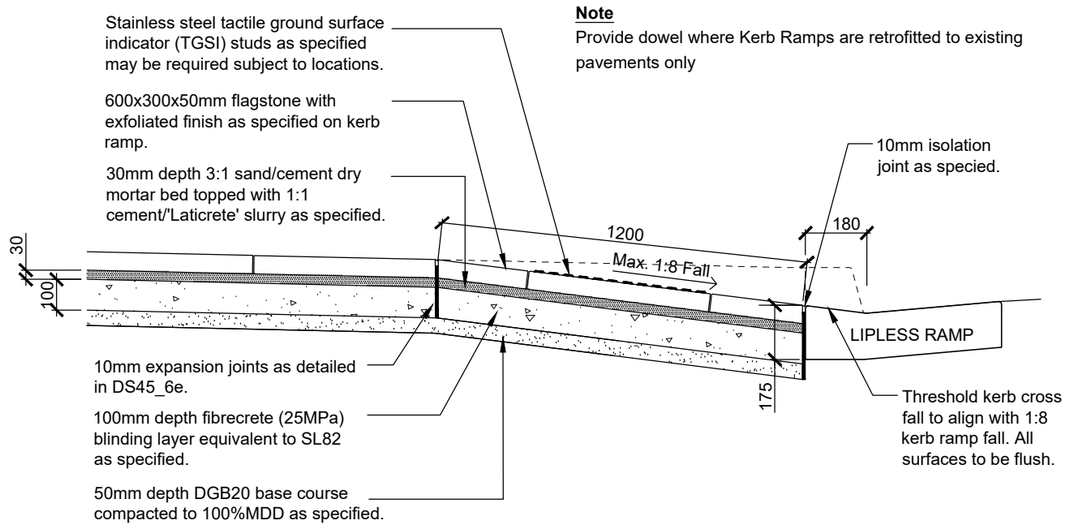

Note
Provide dowel where Kerb Ramps are retrofitted to existing pavements only

Detail 2c: Typical Kerb Ramp Detail Section
SCALE 1:20 @ A3

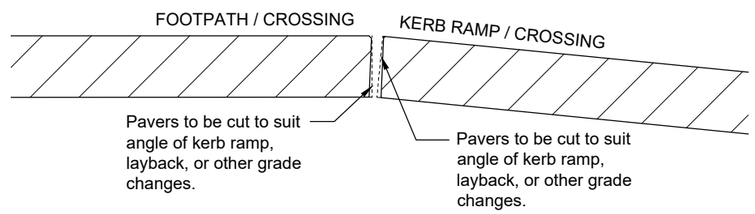

Detail 2d: Detail Stone Edge Treatment on Kerb Ramp
SCALE 1:5 @ A3

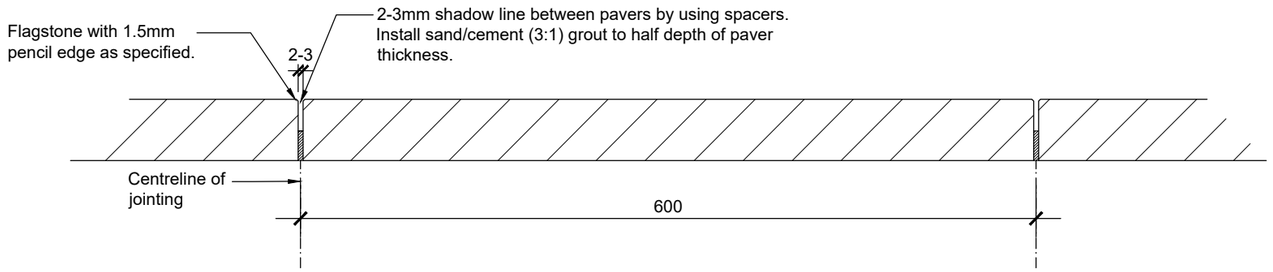

Detail 2e: Typical Jointing Detail
SCALE 1:5 @ A3

All measurement shown are in millimeters, unless otherwise stated

APPROVED - NOT FOR CONSTRUCTION

GRANITE FOOTPATH PAVING DETAILS

REVISION DATE: FEBRUARY 2020
STANDARD DETAIL: DS45 (Sheet 2 OF 7)

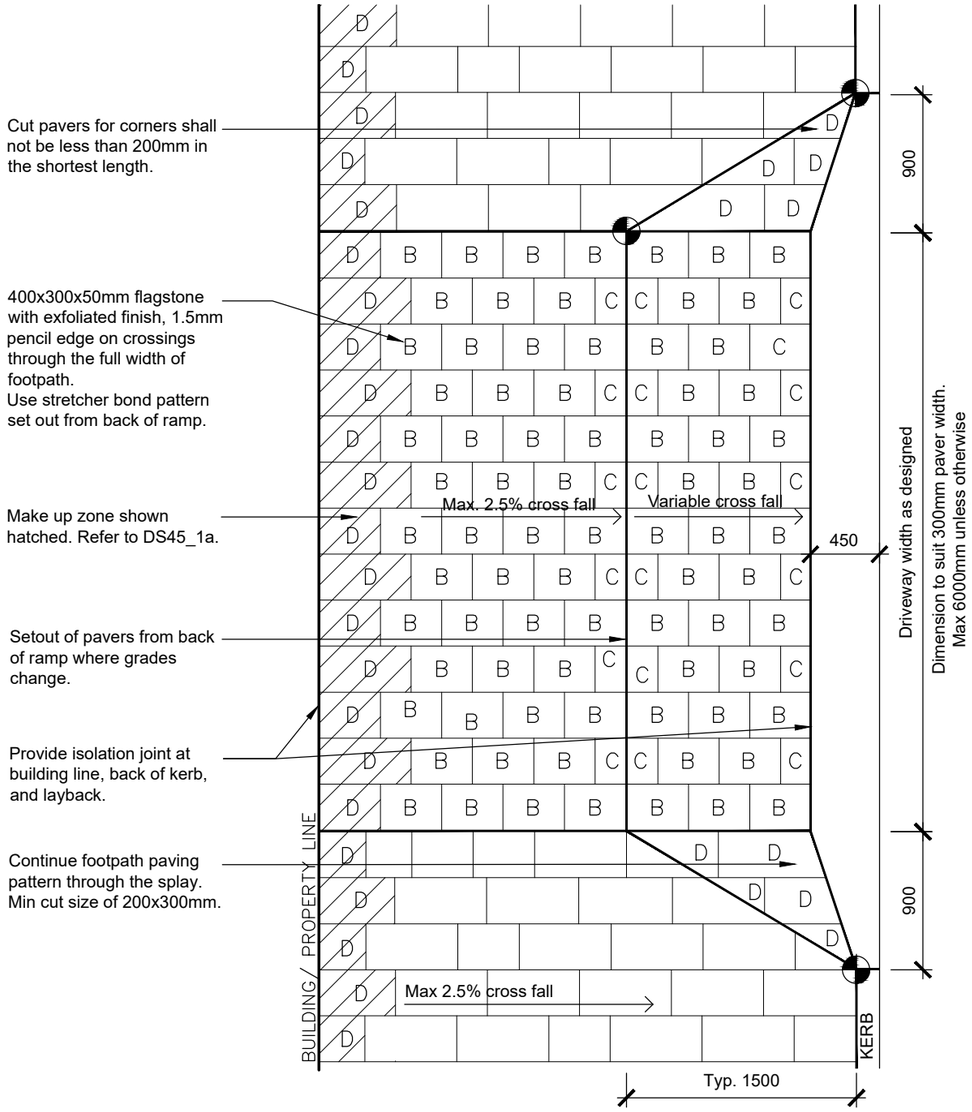

Detail 3a: Typical Vehicle Crossing Paving Layout_Full Granite Treatment
SCALE 1:40 @ A3

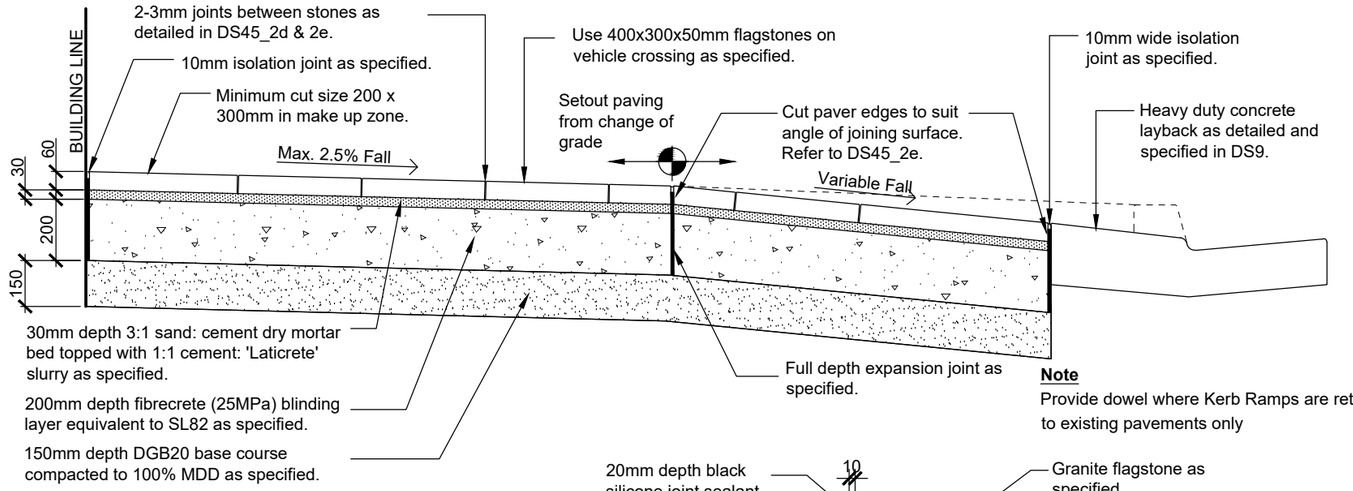

Note
Provide dowel where Kerb Ramps are retrofitted to existing pavements only

Detail 3b: Detail Vehicle Crossing Cross Section
SCALE 1:20 @ A3

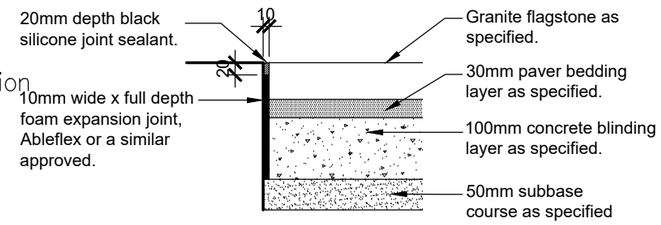

Detail 3d: Typical Isolation Joint Detail_Full Granite Treatment
SCALE 1:10 @ A3

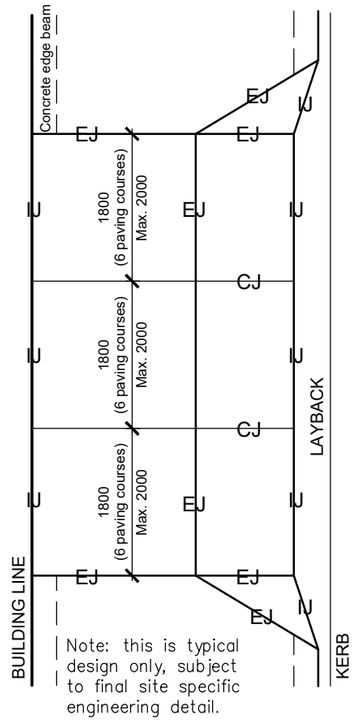

Detail 3c: Typical Joint Layout on Crossing – Full Granite Treatment
SCALE 1:75 @ A3

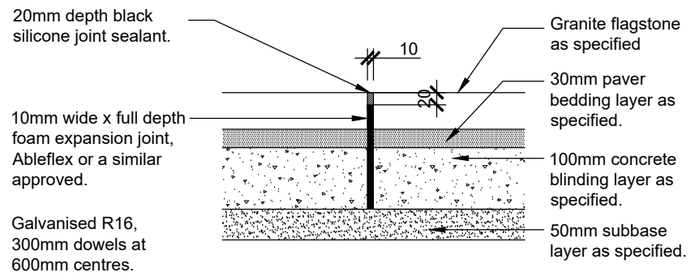

Detail 3e: Typical Expansion Joint Detail_Full Granite Treatment
SCALE 1:10 @ A3

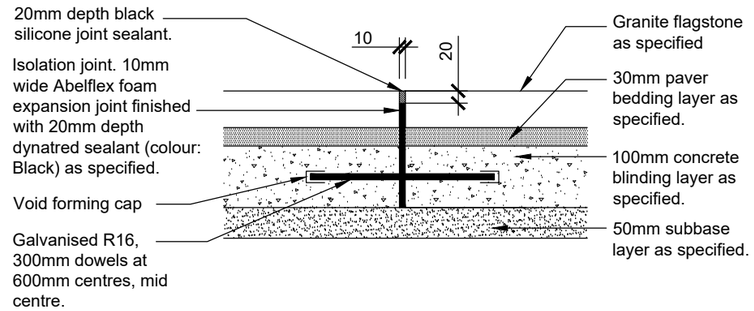

Detail 3f: Typical Dowel Detail_Full Granite Treatment
SCALE 1:10 @ A3

IJ - Isolation Joint
10mm wide x full depth foam expansion joint, Ableflex or form expansion joint to extend to 20mm below FFL to accommodate 20mm depth black silicone joint sealant. Refer to DS45_3d.

EJ - Expansion Joint
10mm wide x full depth subsurface foam expansion joint, Ableflex or similar approved. Finish foam expansion material 20mm below FFL to allow for 20mm depth black silicone joint sealant. Refer to DS45_3e.

DEJ - Dowelled Expansion Joint
300mm long R16 galvanised dowels capped and installed at 600mm centres perpendicular to expansion joint and parallel to pavement centreline and finished surface. Use of proprietary sleeve may be required. Refer to DS45_3f.

CJ - Control Joints (in fibrecrete blinding layer)
3mm wide x 25mm deep sawcut control joint.

All measurement shown are in millimeters, unless otherwise stated

APPROVED - NOT FOR CONSTRUCTION

GRANITE FOOTPATH PAVING DETAILS

REVISION DATE:FEBRUARY 2020
STANDARD DETAIL: DS46 (Sheet 3 OF 7)

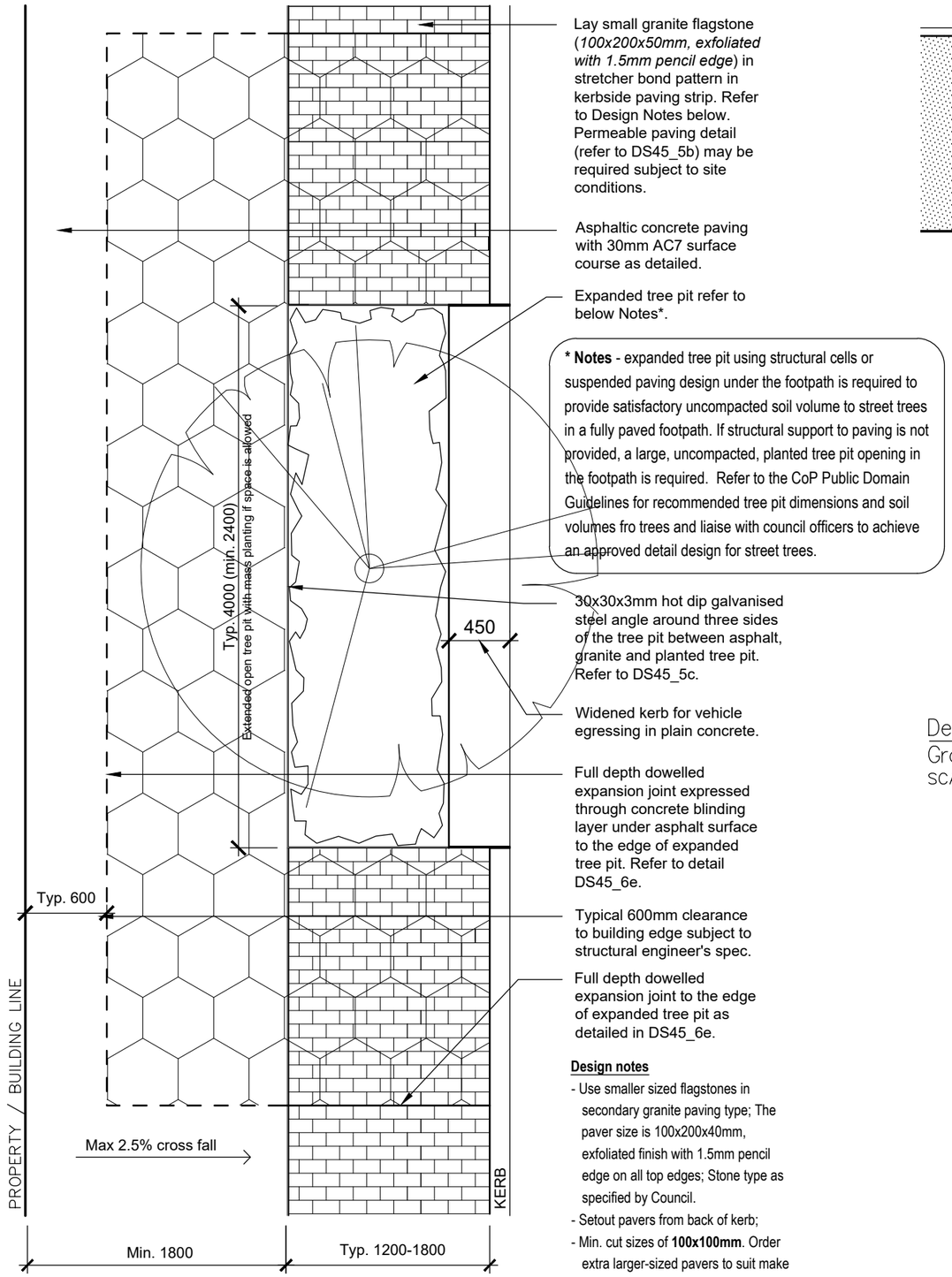

Detail 4a: Typical Footpath Layout with Expanded Tree Pit _Secondary Granite Treatment
SCALE 1:40 @ A3

Design notes

- Use smaller sized flagstones in secondary granite paving type; The paver size is 100x200x40mm, exfoliated finish with 1.5mm pencil edge on all top edges; Stone type as specified by Council.
- Setout pavers from back of kerb;
- Min. cut sizes of **100x100mm**. Order extra larger-sized pavers to suit make up zone;
- Lay pavers in stretcher bond pattern and perpendicular to kerb;
- Use flushing metal edging around tree pit where surface material changes.

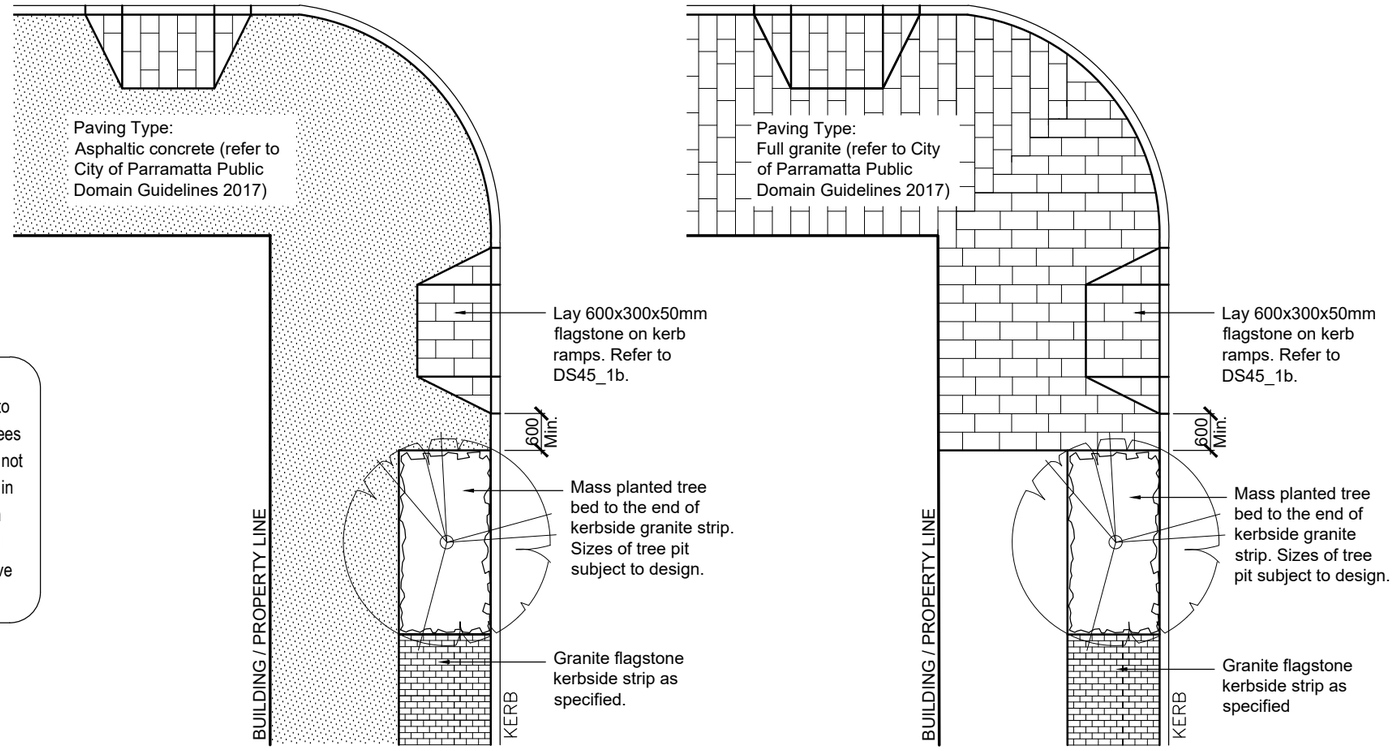

Detail 4b: Typical Street Corner Paving Treatment_Secondary Granite Treatment
SCALE 1:100 @ A3

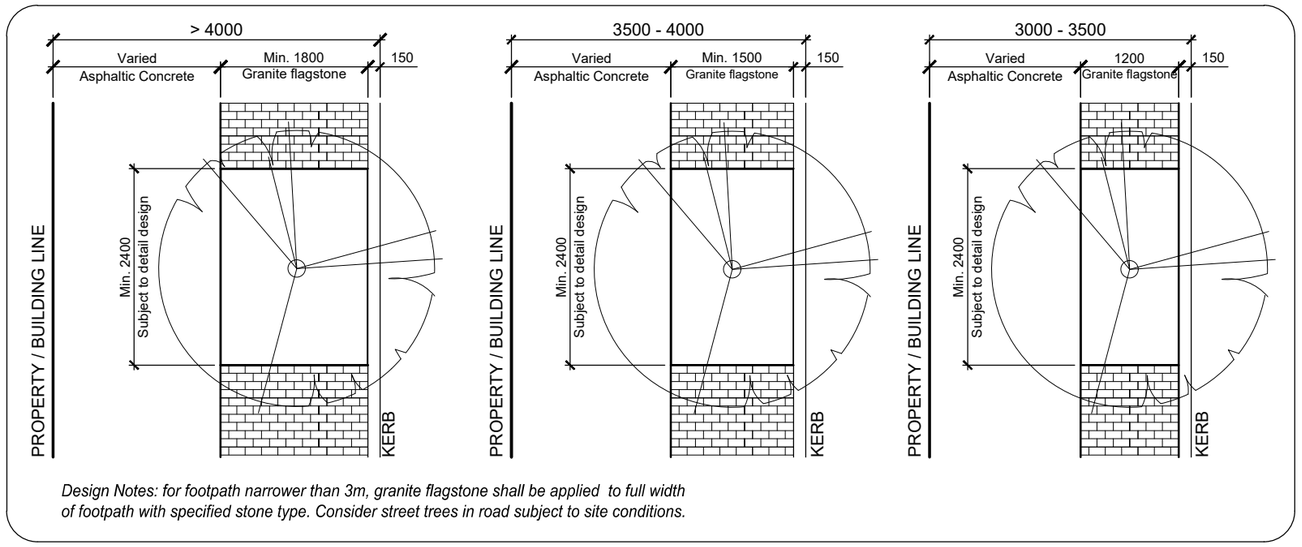

Design Notes: for footpath narrower than 3m, granite flagstone shall be applied to full width of footpath with specified stone type. Consider street trees in road subject to site conditions.

Detail 4c: Typical Footpath Layout on Varied Footpath Widths_Secondary Granite
SCALE 1:75 @ A3

All measurement shown are in millimeters, unless otherwise stated

DRAFT - NOT FOR CONSTRUCTION

GRANITE FOOTPATH PAVING DETAILS

REVISION DATE: FEBRUARY 2020

STANDARD DETAIL: DS45 (Sheet 4 OF 7)

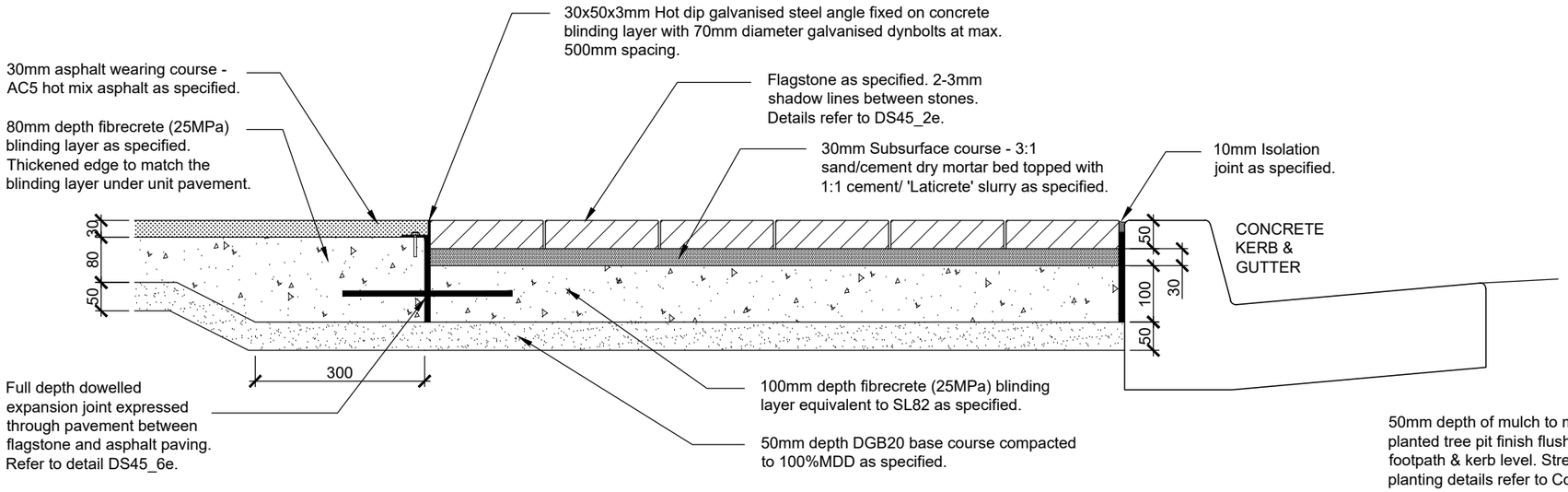

Detail 5a: Typical Footpath Cross Section_Secondary Granite Treatment
SCALE 1:10 @ A3

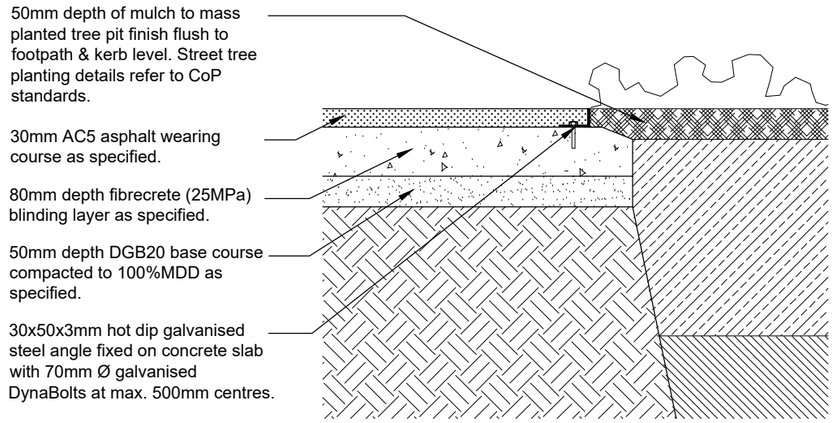

Detail 5c: Typical Steel Edge Detail _Secondary Granite Treatment
SCALE 1:10 @ A3

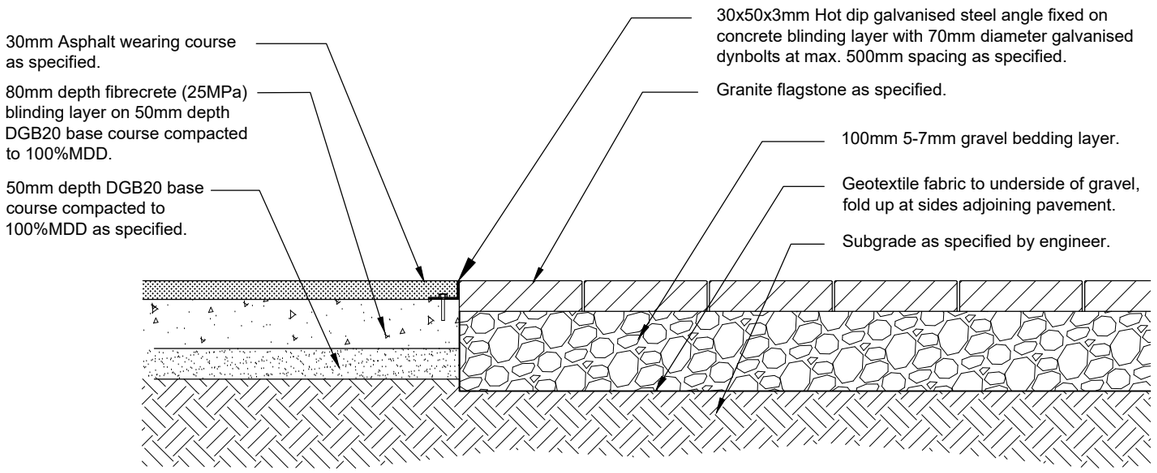

Detail 5b: Typical Permeable Paving Interface Detail_Secondary Granite Treatment
SCALE 1:10 @ A3

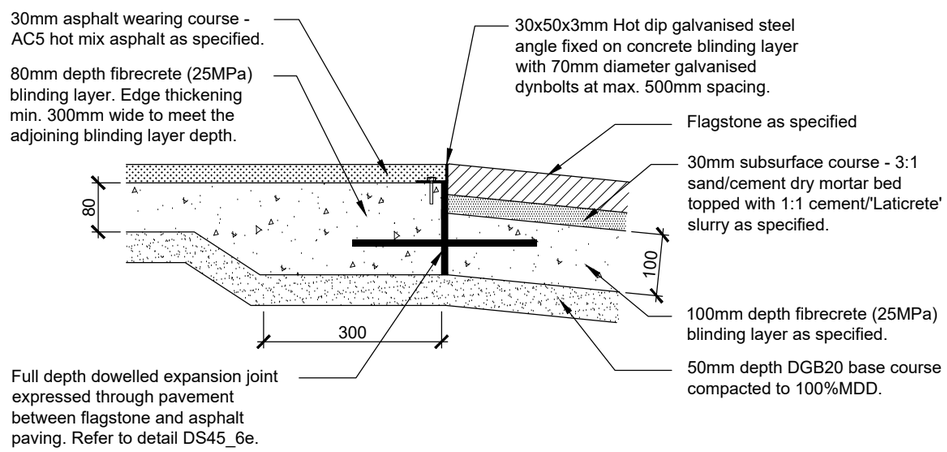

Detail 5d: Detail Kerb Ramp Cross Section _ Secondary Granite Treatment
SCALE 1:10 @ A3

All measurement shown are in millimeters, unless otherwise stated

APPROVED - NOT FOR CONSTRUCTION

GRANITE FOOTPATH PAVING DETAILS

REVISION DATE:FEBRUARY 2020

STANDARD DETAIL: DS45 (Sheet 5 OF 7)

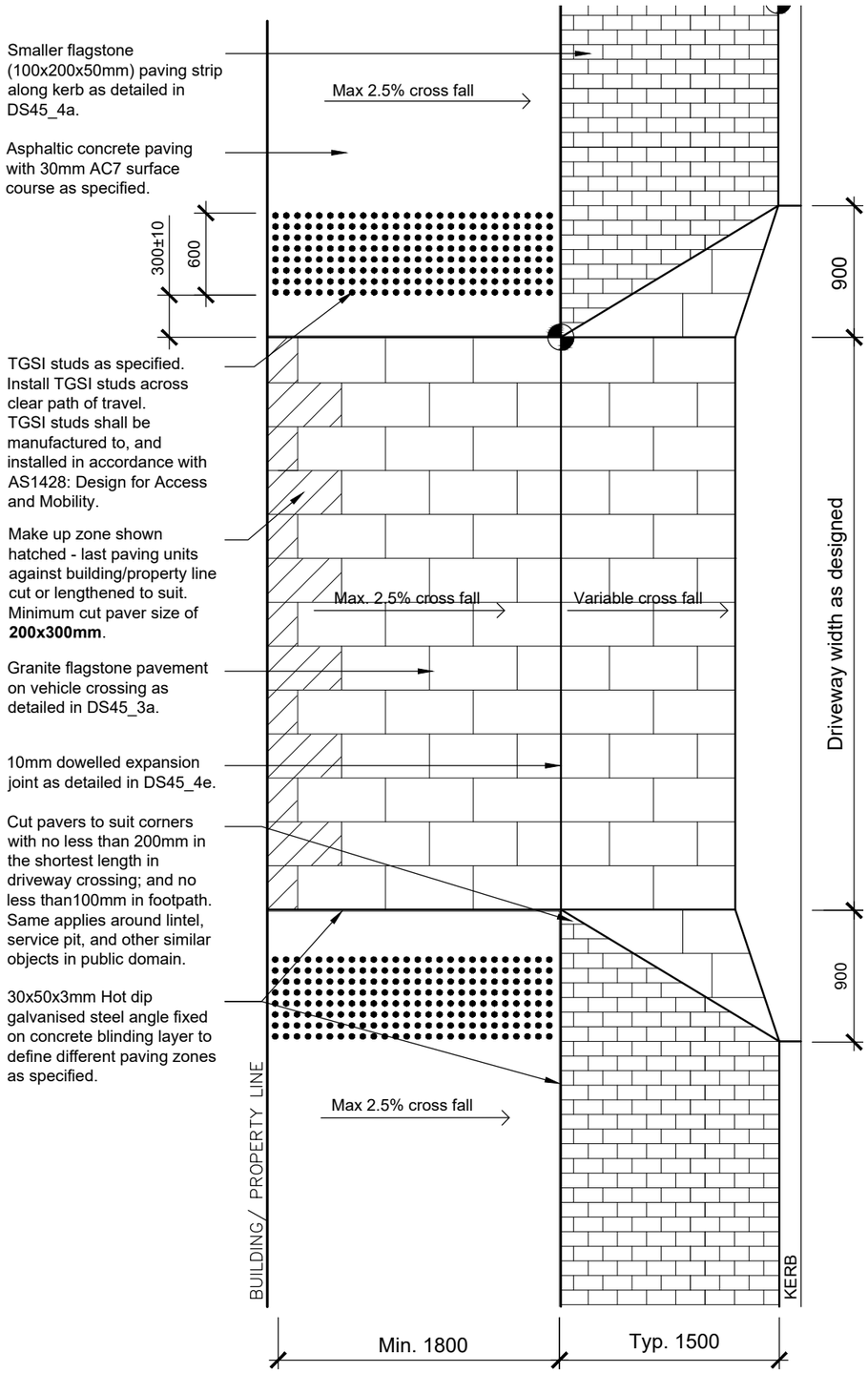

Detail 5e: Typical Vehicle Crossing Paving Layout _Secondary Granite Treatment
SCALE 1:40 @ A3

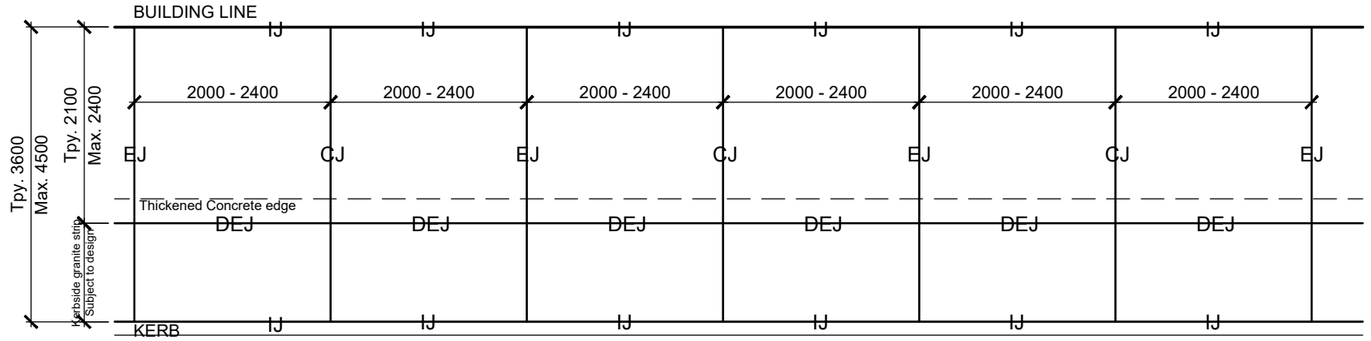

Note: this is typical design only, subject to final site specific engineering detail.

Detail 6a: Typical Concrete Joint Layout on Footpath – Secondary Granite Treatment
SCALE 1:75 @ A3

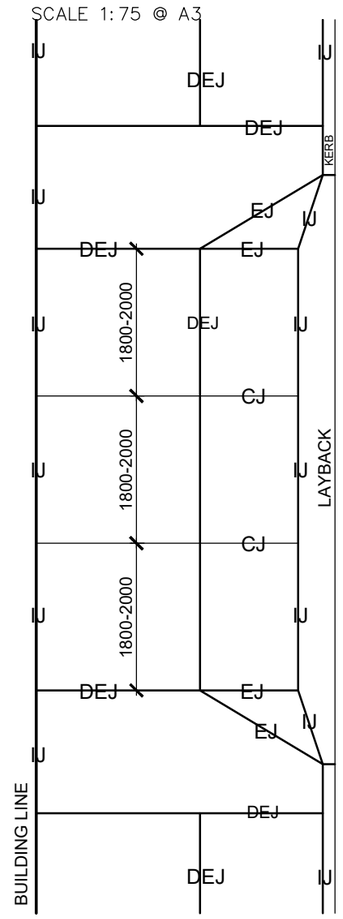

Note: this is typical design only, subject to final site specific engineering detail.

Detail 6b: Typical Concrete Joint Layout on Vehicle Crossing – Secondary Granite Treatment
SCALE 1:75 @ A3

IJ - Isolation Joint
10mm wide x full depth foam expansion joint, Ableflex or form expansion joint to extend to 20mm below FFL to accommodate 20mm depth black silicone joint sealant. Refer to DS45_6c.

EJ - Expansion Joint
10mm wide x full depth subsurface foam expansion joint, Ableflex or similar approved. Finish foam expansion material 20mm below FFL to allow for 20mm depth black silicone joint sealant. Refer to DS45_6d.

DEJ - Dowelled Expansion Joint
300mm long R16 galvanised dowels capped and installed at 600mm centres perpendicular to expansion joint and parallel to pavement centreline and finished surface. Use of proprietary sleeve may be required. Refer to DS45_6e.

CJ - Control Joints
(in fibrecrete blinding layer)
3mm wide x 25mm deep sawcut control joint.

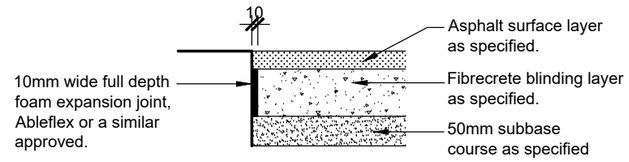

Detail 6c: Typical Isolation Joint Detail _Secondary Granite Treatment
SCALE 1:10 @ A3

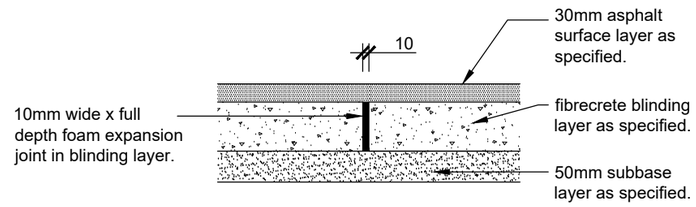

Detail 6d: Typical Expansion Joint Detail_Secondary gran Treatment
SCALE 1:10 @ A3

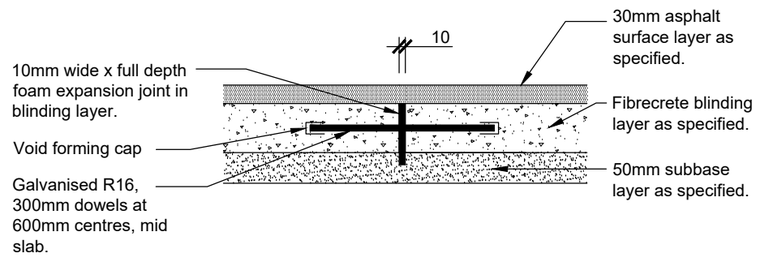

Detail 6e: Typical Dowel Expansion Joint Detail_Secondary Granit Treatment
SCALE 1:10 @ A3

All measurement shown are in millimeters, unless otherwise stated

DRAFT - NOT FOR CONSTRUCTION

GRANITE FOOTPATH PAVING DETAILS

REVISION DATE: FEBRUARY 2020
STANDARD DETAIL: DS45 (Sheet 6 OF 7)

SPECIFICATION NOTES

This City of Parramatta granite paving standard details series shall be read in conjunction with Parramatta City Council's 'Pubic Domain Guidelines' (PDG). This standard details series shall also be read in conjunction with Parramatta City Council's Standard Details (PCC DS). Please refer to the following relevant standard details:

PCC DS1 - Kerbs and Laybacks
PCC DS9 - Heavy Duty Vehicular Crossing
PCC DS40 - CBD Paving and Kerb Ramp Details

SITE PRELIMINARIES

The designer / contractor shall submit to Parramatta City Council and relevant authorities Site Preliminary Plans for approval prior to commencing construction works. Approved plans will include, but not be limited to;

- a detailed works program;
- a dilapidation report;
- location of site compound;
- location of stockpiles and storage areas;
- sources of power;
- facilities and waste services;
- OHS requirements;
- plant equipment and methods for ground works;
- location of temporary fences;
- location of required signage;
- access on, to and around the site;
- the use of the site for temporary works; and
- environmental protection requirements including sedimentation and erosion control.

Site Preliminaries Plans work shall be implemented for the duration of construction works. Any changes or variations to the approved Site Preliminaries Plans shall be submitted to the Council or the relevant authorities for approval.

The designer / contractor shall undertake 'Dial Before You Dig' maximum 1 month prior to designing and commencing works, and locate all services prior to excavation works. The contractor shall liaise with all relevant service authorities as required. All site preliminaries work shall comply to the relevant Australian Standards and EPA requirements.

PEDESTRIAN AND TRAFFIC MANAGEMENT

The designer / contractor shall submit to Parramatta City Council and relevant authorities (including the RMS) Pedestrian and Traffic Management Plans for approval prior to commencing construction works as required. Approved plans will include, but not be limited to;

- the design of temporary roadways and detours;
- traffic switching operations;
- intended stages of work;
- location and adjustments of temporary fencing;
- maintenance of access to shops;
- the provision of traffic controllers, signposting, road markings, raised pavement markers, lights and barriers; and
- any other items required for the safe movement of traffic and the protection of persons and property in accordance with Australian and RMS standards.

Pedestrian and Traffic Management Plans shall be implemented for the duration of construction works. Any changes or variations to the approved Traffic and Pedestrian Management Plans shall be submitted to the Council or the relevant authorities for approval.

GENERAL DEMOLITION

Demolish, excavate and remove from site all items scheduled or required for removal for proposed works. All demolition material must be disposed of at an EPA approved tipping site. Proof of documents must be available to be shown upon request. Retain and protect all items proposed to be retained. Damage to private property or assets shall be rectified at the contractors expense. All demolition works shall comply to the relevant Australian Standards.

CONSTRUCTION HOLD POINTS FOR APPROVAL

Give sufficient notice (24 hours) to Council and relevant authorities so that inspection may be made of the following:

- setout of all hardworks;
- excavation levels before covering;
- base course preparation;
- completed formwork;
- reinforcement, cores, dowels, joints and embedments fixed in place;
- commencement of concrete placing;
- completion of concrete works to accurate levels;
- confirmation of paver type;
- unit pavement layout;
- completed joints and finishes;
- setout of all tactile and directional indicators;
- completion of tactile and directional indicators installation;
- evaluation of the finish.

GRANITE FLAGSTONES

Supplier - Sam the Paving Man or Melocco. The contractor shall co-ordinate with the nominated firm for access, delivery and timeframes.

Samples: Provide a full sized sample of all paver types, colours, sizes and finishes to Council officer for approval. These samples will be used to benchmark paver quality by Council officer throughout the project and for OC sign-off.

"Adelaide Black" Granite*
- Size variation: 600x300x50mm; 400x300x50mm; 200x100x50mm
- finish: exfoliated (typical); bush hammered(inlays)
- "V" Class (AS/NZS 4586:2004) slip resistance to top surface of paver
- 1.5mm pencil edge to all top edges

"Sesame Grey" Granite*
- Size variation: 600x300x50mm; 400x300x50mm
- finish: exfoliated/bush hammered
- "V" Class (AS/NZS 4586:2004) slip resistance to top surface of paver
- 1.5mm pencil edge to all top edges

"Silver Black" Granite*
- Size variation: 600x300x50mm; 400x300x50mm
- finish: exfoliated/bush hammered
- "V" Class (AS/NZS 4586:2004) slip resistance to top surface of paver
- 1.5mm pencil edge to all top edges

* Refer to seperate details for colour patterns.

CONCRETE BLINDING LAYER

Fibrecrete blinding layer and base course:
Full width footpath (Full Granite Treatment): Place 100mm thick fibrecrete (25MPa) with equivalent strength to SL82 on minimum 50mm deep DGB20 to 100% standard compaction.

Foot traffic zone (Secondary Granite Treatment): Place 80mm thick fibrecrete (25MPa) with equivalent strength to SL82 on minimum 50mm deep DGB20 to 100% standard compaction.

Kerb side paving strip (Secondary Granite Treatment): Place 100mm thick fibrecrete (25MPa) with equivalent strength to SL82 on minimum 50mm deep DGB20 to 100% standard compaction.

Driveway (all treatments): Place 200mm thick fibrecrete (25MPa) blinding layer with equivalent strength to SL82 on minimum 150mm deep DGB20 to 100% standard dry compaction.

Any soft spots in sub-grade shall be removed as directed by CoP Superintendent / Asset Inspector.

Isolation Joints (IJ):
Place 10mm wide full depth Abelflex foam expansion joint between:
1. Fibrecrete blinding layer and concrete vehicle layback.
2. Fibrecrete blinding layer and building line.
3. 100mm depth fibrecrete blinding layer (pavement) and 200mm depth fibrecrete blinding layer (vehicle crossing).

Abelflex foam expansion joint to extend to 20mm below finished paver level to accommodate 20mm depth black silicone joint sealant. Refer to DS45_3d & 6c of this standard detail.

Expansion Joints (EJ):
Place 10mm wide Abelflex foam expansion joint as detailed. Finish foam expansion material 20mm below FFL to allow 20mm depth black silicone joint sealant. Refer to DS45_3e & 6d of this standard detail.

Dowelled Expansion Joints (DEJ):
Where kerb ramps are retrofitted to existing pavement, provide 300mm long R16 galvanised dowels. Drill and epoxy dowel into blinding layer. Coat other half of dowel in bond breaking agent and install with void forming cap. Place dowels at 600mm centres perpendicular to expansion joint and parallel to pavement centreline and finished surface.. Use of proprietary sleeve may be required. Refer to DS45_3f & 6e of this standard detail.

Control Joints (CJ) in fibrecrete blinding layer:
Place 3mm wide x 25mm deep sawcut control joint perpendicular to kerb and building line in fibrecrete blinding layer.

SETOUT OF PAVERS

Pavers shall be setout accurately as per approved site construction plans and this standard detail. Any variation shall be referred to PCC Development Officer / Superintendent / Asset Inspector for approval prior to construction.

LAYING OF PAVERS

Laying pavers (including mortar bed, cuts and finishes):
Laying of pavers is to commence from the vehicle crossing change of grade (2.5% to 10%). Pavers will be laid towards the property boundary. Ensure all pavers are fully bedded on a 30mm thick 3:1 sand/cement dry bed topped with cement slurry to achieve bond with pavers. For cement slurry use 1:1 cement: 'Laticrete 3701 Mortar Admix'. Mix mortar admix to manufacturers specifications. Do not apply water to cement slurry. Use 'Laticrete 335 premium Flexible Adhesive' or '4237 Latex Additive', or similar approved as recommended by the manufacture. The pavers are to be manually tamped with a rubber mallet into the slurry bed. The use of vibrating compaction equipment eg. wakka plate, is strictly prohibited. Cut pavers as shown on this standard detail. All paver edges to be laid flush to adjacent edges to avoid trip hazards. Ensure adjoining existing pavements finish flush with proposed works. Minimum paver width is to be 200mm x 300mm. If required use larger pavers to fill small gaps to avoid slivers.

Jointing between pavers:
Joints between pavers shall be no greater than 2-3mm. The use of spacers is required. Top of pavers shall finish flush to form an even surface to avoid trip hazards. The joints between pavers are to be filled with sand/cement 3:1 grout to 1/3 depth of the pavers, or to flush with surface of pavers, subject to Council's advice.

Protective paver sealant:
Paver Sealant Preparation: Pavers are to be cleaned with all stains, contaminants, salt residue and debris removed in preparation for sealant application. Clean pavement surface with appropriate 'Techniseal' cleaning product or an approved equivalent. Prepare the entire surface by removing all efflorescence and ground-in dirt. This ensures a uniform cleaning and allows the protective sealant to better penetrate the surface. Apply sealant as per manufacturers recommendations. Wash down with water and soap if required.

Sealant Type: To be advised by Council.

TGSIs (tactile ground surface indicators):
Tactile indicator type - 316 stainless steel tactile stud indicator. Tactile surface indicators shall be manufactured to, setout and installed in accordance with Council's PDG and AS1428: Design for Access and Mobility. Tactile indicators shall have a minimum slip resistance of R12.

CLEANING OF PAVERS

All pavers laid during the course of one working day must be cleaned at the end of that day before proceeding with laying of subsequent pavers. This is to prevent residue build up on pavers which may become difficult to clean if left overnight or for prolonged periods.

All measurement shown are in millimeters, unless otherwise stated

DRAFT - NOT FOR CONSTRUCTION

GRANITE FOOTPATH PAVING DETAILS

REVISION DATE: FEBRUARY 2020

STANDARD DETAIL: DS45 (Sheet 7 OF 7)

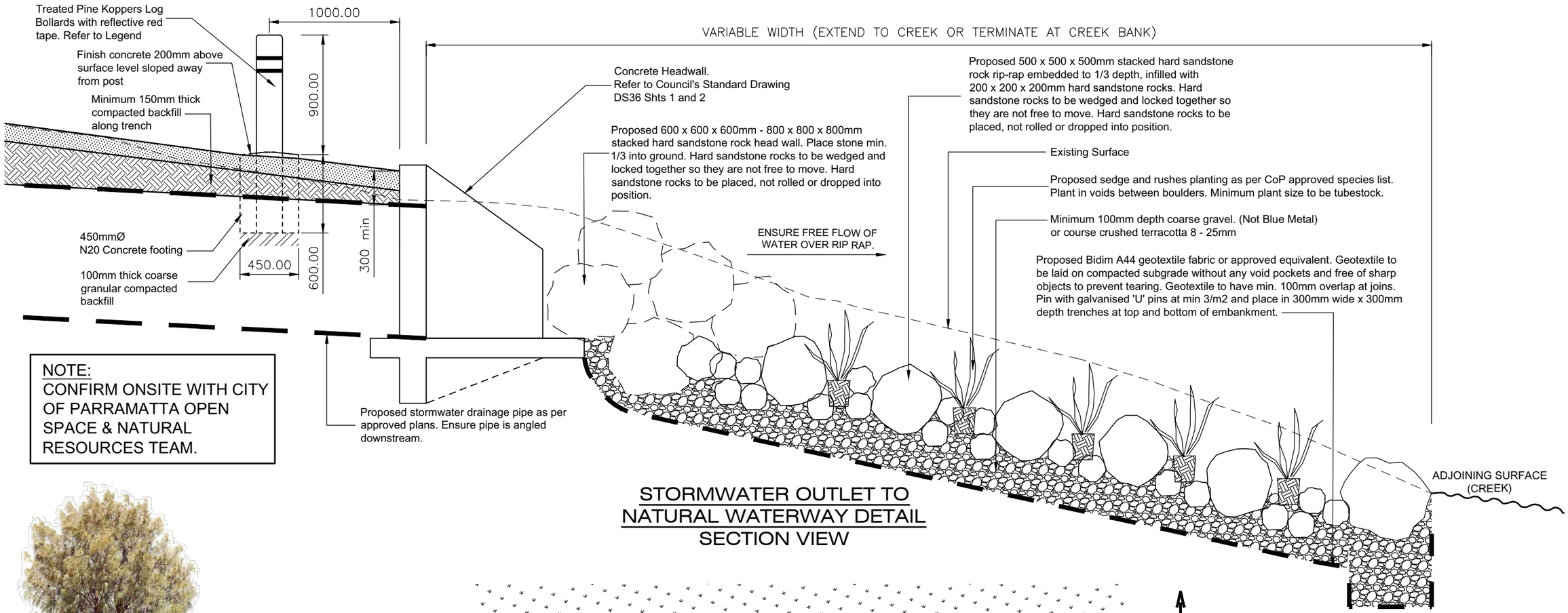

STORMWATER OUTLET TO NATURAL WATERWAY DETAIL
SECTION VIEW

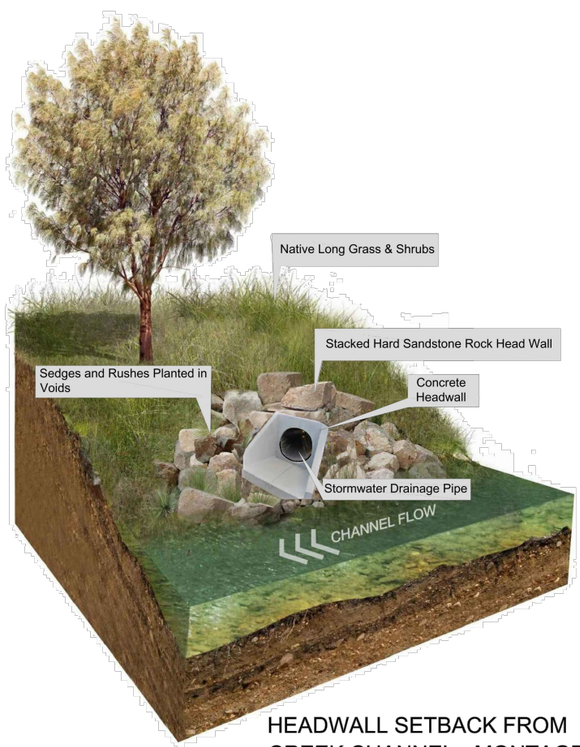

HEADWALL SETBACK FROM CREEK CHANNEL - MONTAGE

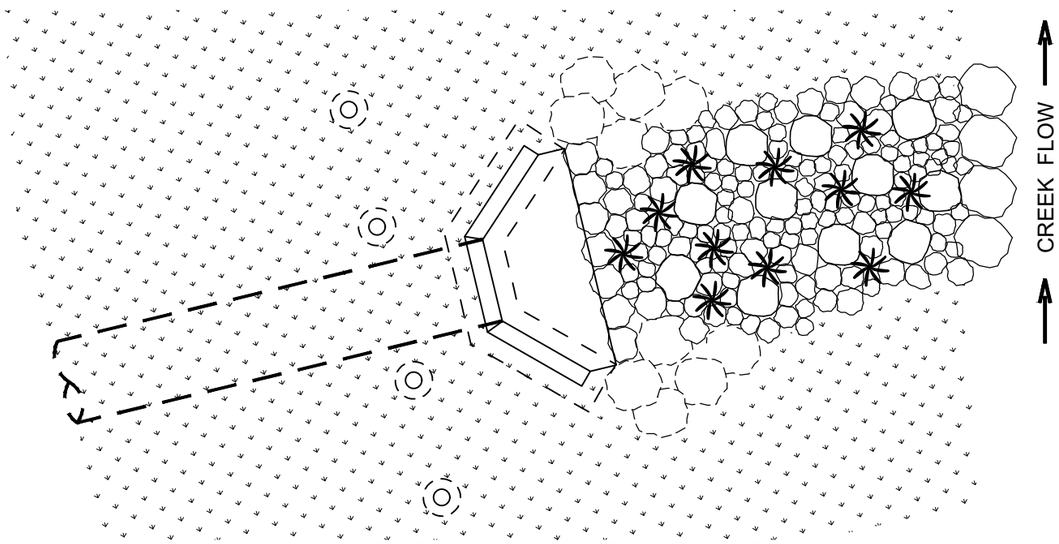

STORMWATER OUTLET TO NATURAL WATERWAY DETAIL
PLAN VIEW

200mmØ TREATED PINE KOPPERS LOG BOLLARDS OR APPROVED EQUIVALENT (x4 NOS. OR AS SPECIFIED ON DESIGN) WITH CONCRETE FOOTINGS 1.5m APART. INSTALLATION SHOULD BE IN ACCORDANCE WITH MANUFACTURER'S INSTALLATION REQUIREMENTS. PROVIDE REFLECTIVE RED TAPES. BOLLARDS TO BE INSTALLED CLEAR OF PIPE.

150mm THICK ROAD BASE DGB20 COURSE UNDER GEOTEXTILE

COMPACTED SOIL, MINIMUM 150mm THICK

TO ALL DISTURBED AREAS PLANT WITH NATIVE GROUNDCOVERS / CHANNEL
PROVIDE 150mm THICK TOPSOIL AND GRASS SAME AS EXISTING SURROUNDING SPECIES

COMPACTED TOPSOIL, MINIMUM 150mm THICK

Image reference: Sydney Water - Stormwater connections to natural waterways, 31 July 2014.

CITY OF PARRAMATTA	UNLESS DETAILED ON THIS DRAWING ALL WORK SHALL CONFORM TO AUS SPEC	Date: OCTOBER 2019	Project: STORMWATER OUTLET NATURAL WATERWAY STANDARD DETAIL	Drawing Status: FINAL
		Scale: NOT TO SCALE		Drawing N°: DS46

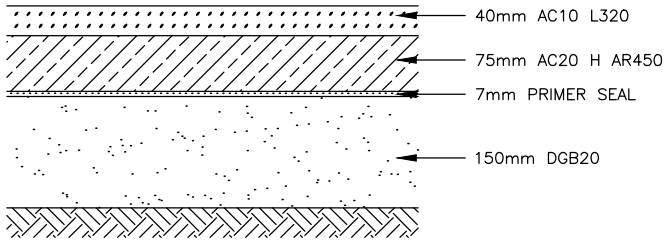

TRAFFIC <4 x 10^4ESAs: CBR >= 3%

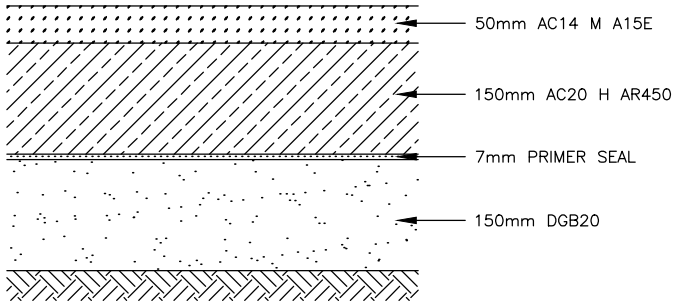

TRAFFIC BETWEEN 10^5 AND 10^6 ESA: CBR >= 3%

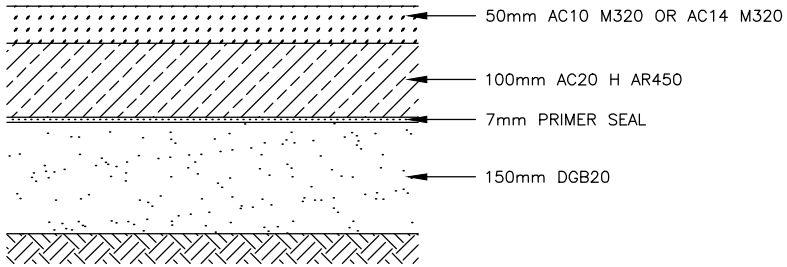

TRAFFIC BETWEEN 4 x 10^4 AND 10^5 ESA: CBR >= 3%

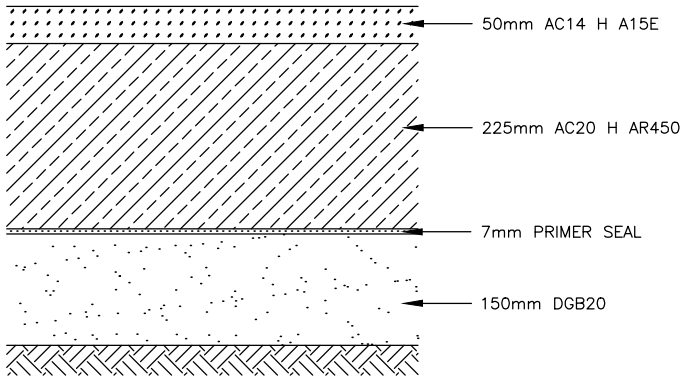

TRAFFIC BETWEEN 10^6 AND 10^7 ESA: CBR >= 3%

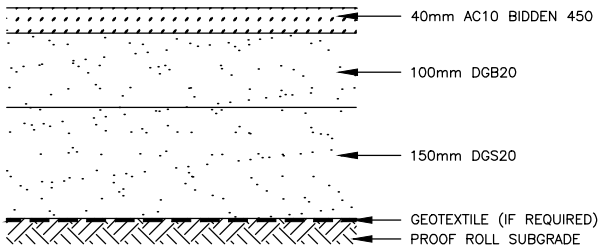

PAVEMENT FOR OFF-STREET CAR PARK

NOTE

1. IF SUBGRADE IS TOO WEAK TO SUPPORT CONSTRUCTION TRAFFIC AT THE TIME OF CONSTRUCTION OR IF CBR <3%, IT SHOULD BE STABILISED WITH LIME OR REPLACED WITH SUITABLE GRANULAR MATERIAL (GEOGRIDS / GEOTEXTILES CAN BE PROVIDED)
2. CONSTRUCTION TOLLERANCES ARE NOT INCLUDED IN ABOVE THICKNESSES
3. AUS SPEC APPLICABLE FOR ROADS WITH DESIGN TRAFFIC OF LESS THAN 10^5 ESAs
4. TfNSW SPECIFICATIONS APPLICABLE FOR DESIGN TRAFFIC OF MORE THAN 10^5 ESAs
5. THE PAVEMENT PROFILES CAN BE CHANGED BY FORMAL PAVEMENT DESIGN FOR SPECIFIC SITE IN ACCORDANCE WITH AUSTROADS PAVEMENT DESIGN GUIDE AND CoP PAVEMENT ENGINEER APPROVAL.

AMENDMENTS			
No.	DETAIL	DATE	CHECKED

DESIGNED / DRAWN Date:

DESIGN CHECKED & APPROVED Date:

MANAGER CAPITAL PROJECTS Date:

Scale: N.T.S.

FINAL

ASSET OWNER Date:

GROUP MANAGER CITY ASSETS & ENVIRONMENT Date:

CITY OF PARRAMATTA COUNCIL

TYPICAL SECTIONS
ROAD PAVEMENTS

PLAN N° DS47

Sheet No : 1 of 1

Revision :

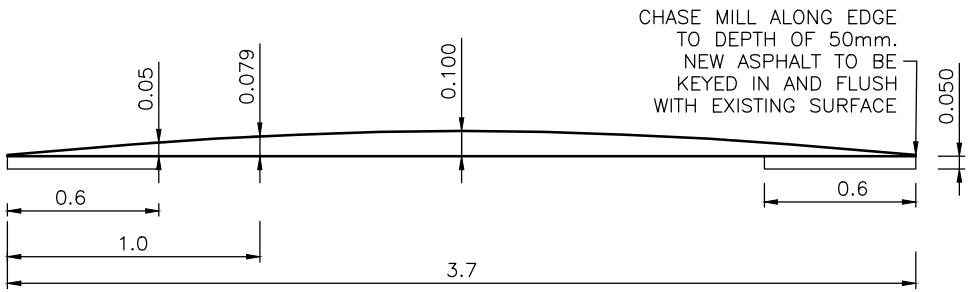

SECTION X
N.T.S. (mm)

WATTS PROFILE SPEED HUMPS
1. CONSTRUCT HUMP SHAPE IN AC20.
2. FOR WATTS HUMP PROFILE REFER TO AUSTROAD GUIDE TO TRAFFIC MANAGEMENT PART 8 : LOCAL STREET MANAGEMENT AND AS 1742.13-2009 FIGURE 3.2 AND CLAUSE 4.6.6 FOR DETAILS OF LINEMARKING AND SIGNAGE
3. CONFIRM WITH SUPERVISING ENGINEER PRIOR TO CONSTRUCTION

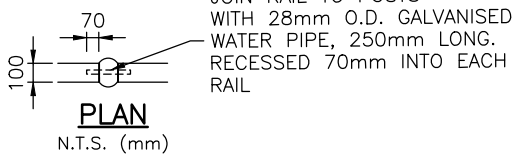

PLAN
N.T.S. (mm)

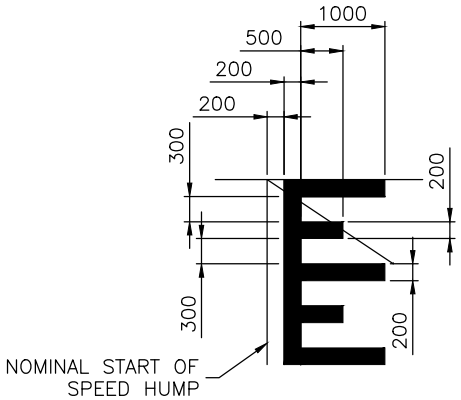

PIANO KEY DETAIL
N.T.S. (mm)

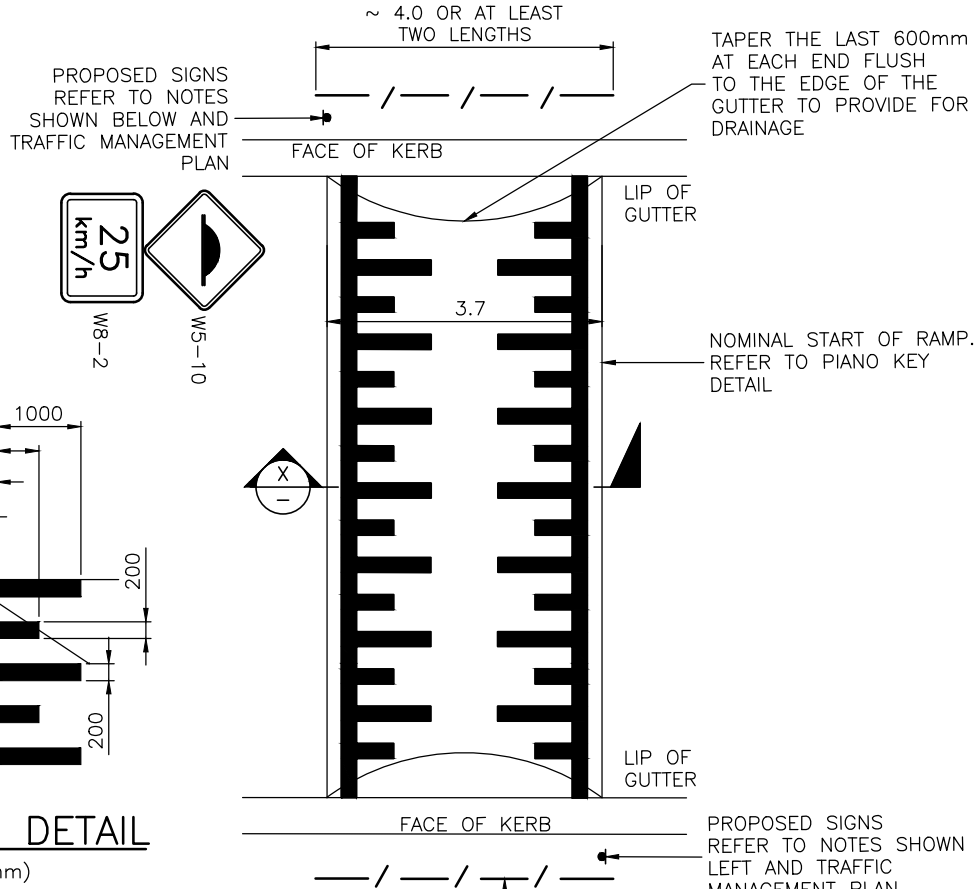

DETAIL
N.T.S. (mm)

*DESIGN PLAN INSTRUCTIONS TAKE OVER TYPE OF FENCE AND INSTALLATION METHOD

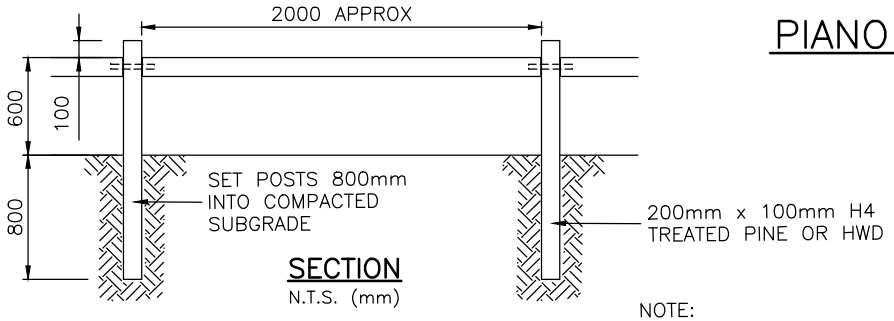

SECTION
N.T.S. (mm)

NOTE:
SEAL ALL CUTS WITH APPROVED TREATED PINE PRODUCT

KOPPER'S LOG FENCE
N.T.S. (mm)

AMENDMENTS			
No.	DETAIL	DATE	CHECKED

DESIGNED / DRAWN Date:	Scale: N.T.S	FINAL	CITY OF PARRAMATTA COUNCIL
DESIGN CHECKED & APPROVED Date:	ASSET OWNER Date:		WATTS PROFILE SPEED HUMP
MANAGER CAPITAL PROJECTS Date:	GROUP MANAGER CITY ASSETS & ENVIRONMENT Date:		SECTION AND DETAILS

PLAN N°
DS48
Sheet No : 1
Revision :